Steven L. Beshear
Governor

TRANSPORTATION CABINET
Frankfort, Kentucky 40622
www.transportation.ky.gov/

Michael W. Hancock, P.E.
Secretary

May 23, 2013

CALL NO. 100
CONTRACT ID NO. 131037
ADDENDUM # 1

Subject: Jefferson County, TIP-STPE 0163 (035)
Letting June 7, 2013

(1) Revised - Plan Sheets
(2) Revised - Table of Contents - Pages 16-17 of 794
(3) Revised - Bid Form - Page 32 of 794
(4) Revised - Note - Page 52 of 794
(5) Revised - Unit Prices - Pages 135-144(a) of 794
(6) Revised - Alternates - Page 146 of 794
(7) Revised - Pipe & Tube Railings - Pages 336-342 of 794
(8) Revised - Exterior Rough Carpentry - Pages 351-352 of 794
(9) Revised - PCCP Notes - Pages 642, 645 & 651(a) of 794
(10) Revised - Native Plants - Page 708 of 794

Proposal revisions are available at http://transportation.ky.gov/Construction-Procurement/.

Plan revisions are available at http://www.lynnimaging.com/kytransportation/.

If you have any questions, please contact us at 502-564-3500.

Sincerely,

Ryan Griffith

Ryan Griffith
Director
Division of Construction Procurement
RG:ks
Enclosures

GENERAL NOTES

1. REFER TO CIVIL DRAWINGS FOR TRAIL, ROAD AND LOOP ALIGNMENTS BEYOND WHAT IS SHOWN.

2. UNLESS OTHERWISE NOTED ON THESE DRAWINGS, REFER TO CIVIL DRAWINGS FOR SPOT ELEVATIONS & SITE GRADING.

3. SEAT WALLS AND ROCK FENCE DIMENSIONS ARE TAKEN AT THE CENTERLINE OF THE WALL ARC.

4. PROTECTION OF TREES IS CRITICALLY IMPORTANT WITHIN ALL AREAS OF THE WORK. PRIOR TO ANY CLEARING, THE "LIMITS OF DISTURBANCE" FOR CONSTRUCTION OF ALL BUILDINGS, ARCHITECTURAL FEATURES, PLAZAS, AND UNDERGROUND UTILITIES SHALL BE STAKED BY THE CONTRACTOR, AND THE STAKED ALIGNMENTS SHALL BE REVIEWED BY THE OWNER'S DESIGNATED TREE PROTECTION REPRESENTATIVE. NO CLEARING OR CONSTRUCTION ACTIVITY SHALL OCCUR UNTIL THE AREAS TO BE DISTURBED ARE STAKED, REVIEWED AND APPROVED BY THE OWNER'S REPRESENTATIVE. CLEARING SHALL BE MINIMIZED AND STRICTLY LIMITED TO THE STAKED AND APPROVED AREAS OF DISTURBANCE. DURING CONSTRUCTION, THE CONTRACTOR SHALL AVOID USING ANY UNCLEARED WOODED AREAS OUTSIDE OF THE APPROVED AREAS OF DISTURBANCE FOR ACCESS, MATERIAL STORAGE OR PARKING.

KEY NOTES

A	SEAT WALL, SEE DETAILS 2&3/A7-301	I	BOLLARDS/FENCES/GATES, SEE DRAWING SUBSET A8-100 FOR DETAILS & LAYOUT	Q	RETAINING WALL, SEE CIVIL DRAWINGS FOR LAYOUT AND DETAILS
B	PLANTATION ERA ROCK FENCE, SEE DETAILS 1&8/A7-301	J	CULVERT, SEE CIVIL DRAWINGS FOR LAYOUT AND DETAILS	R	UTILITY LINES, SEE CIVIL DRAWINGS FOR LAYOUT NO DETAILS
C	CONTROL JOINT, SEE DETAIL 7/A7-301	K	BRIDGE, SEE CIVIL DRAWINGS FOR LAYOUT AND DETAILS	S	LIMESTONE BENCH – SEE DETAIL 10/A7-301
D	EXPANSION JOINT, SEE DETAIL 6/A7-301	L	ROAD STRIPPING, SEE CIVIL DRAWINGS AND SPECIFICATIONS FOR DETAILS	T	BIKE RACK, N.I.C.
E	LOUISVILLE LOOP, SEE CIVIL DRAWINGS FOR LAYOUT AND DETAILS	M	PARKING LOT, SEE CIVIL DRAWINGS FOR LAYOUT AND DETAILS	U	TRASH CAN, N.I.C.
F	ADA DETECTABLE WARNING PAVERS, SEE DETAILS 4&5/A7-301	N	TRAILHEAD SIGNAGE, SEE DETAILS 11,12,13/A7-301	V	BENCH, N.I.C.
G	EXCURSION TRAIL – SEE CIVIL DRAWINGS FOR LAYOUT AND DETAILS	O	LATERAL FIELD, SEE CIVIL DRAWINGS FOR LAYOUT AND DETAILS	W	PICNIC TABLE, N.I.C.
H	C.I.P. CONCRETE PEDESTRIAN WALK, SEE DETAIL 9/A7-301	P	4 RAIL FENCE & GATE, SEE SUBSET A8-100 FOR DETAILS & LAYOUT	X	LIGHT BOLLARD, SEE ELECTRICAL DRAWINGS FOR FIXTURE TYPE AND DETAILS

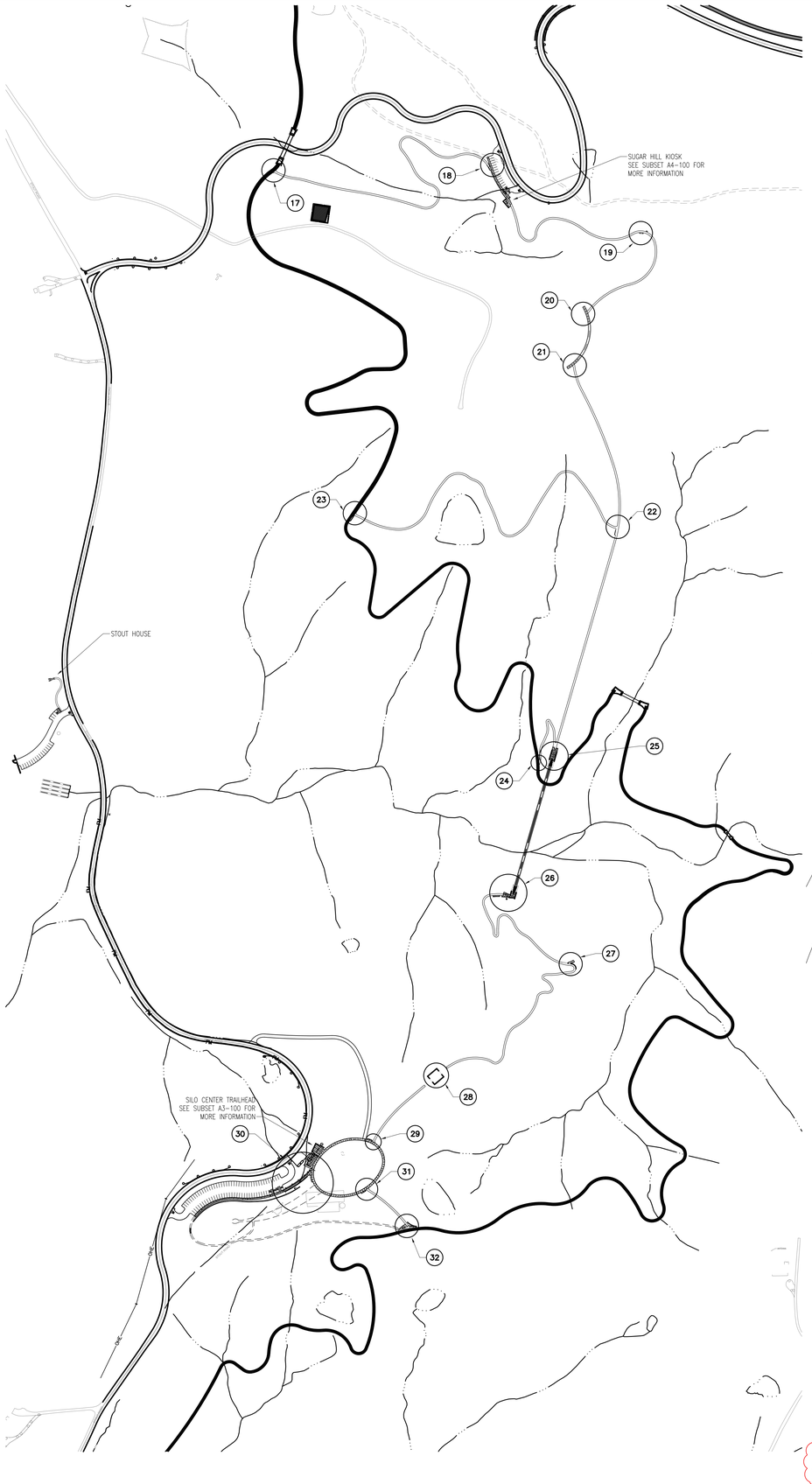

KEY PLAN

SCALE: 1"=200'-0"

Sugar Hill & Silo Center — G / A7-105

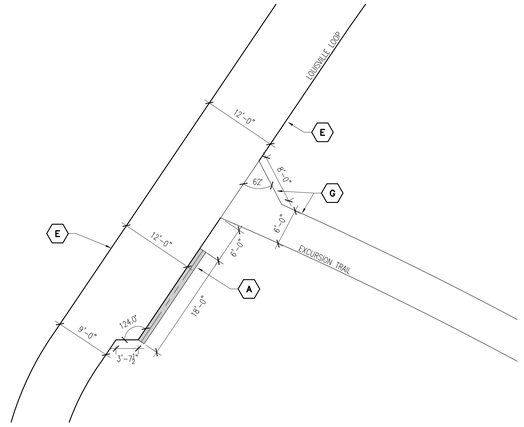

KNUCKLE 23

SCALE: 1"=10'-0"

23 / A7-105

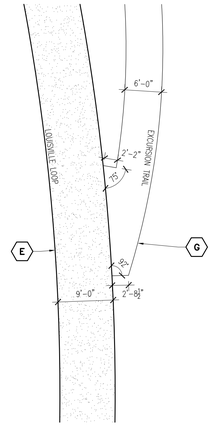

KNUCKLE 24

SCALE: 1"=10'-0"

24 / A7-105

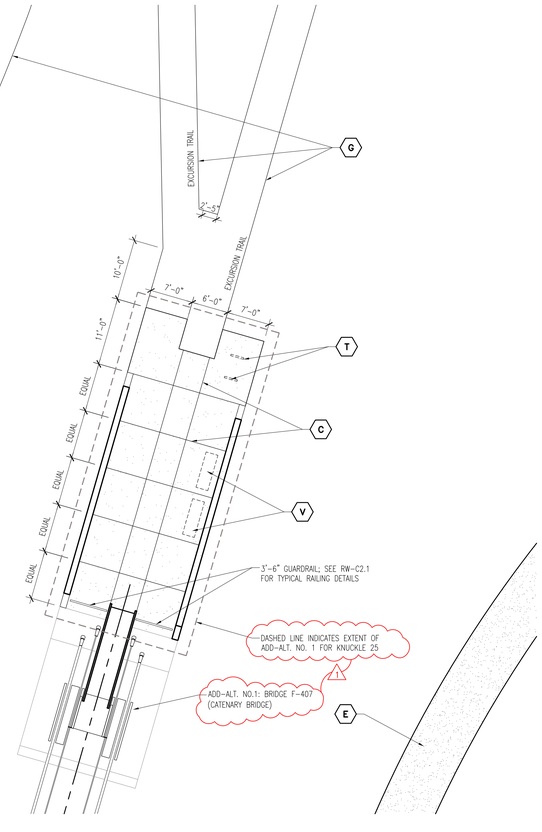

KNUCKLE 25 - ADD-ALT. NO.1

SCALE: 1"=10'-0"

25 / A7-105

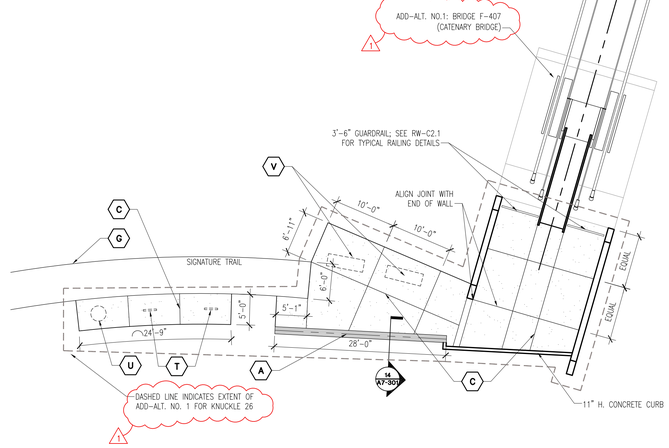

KNUCKLE 26 - ADD-ALT. NO.1

SCALE: 1"=10'-0"

26 / A7-105

JAMES J. WALTERS REGISTERED COMMONWEALTH OF KENTUCKY ARCHITECT

Architecture
Engineering
Planning

815 West Market Street, Suite 200, Louisville, Kentucky 40202
Phone: 502.584.9900 Fax: 502.584.0829 www.bravura-arch.com
Kentucky · Indiana · Georgia · West Virginia · Tennessee · Florida

LANDSCAPE ARCHITECT
WRT
Wallace Roberts & Todd, LLC
1700 Market Street
28th Floor
Philadelphia, PA 19103
tel 215.732.5215
fax 215.732.2551

Architect
BRAVURA
111 West Washington Street
Louisville, Kentucky 40202
T: (502) 584-9900
F: (502) 584-0829

The Parklands of Floyds Fork, Project 4A

The Strand, Turkey Run Park and Broad Run Park
Louisville, Kentucky

Owner:
21st Century Parks, Inc.
371 W. Main St., Suite 202
Louisville, Kentucky 40202

REV #	DATE	DESCRIPTION
	05/08/2013	ISSUED FOR BID
1	05/23/2013	ADDENDUM #1: KNUCKLE 25 & 26 INCLUDED IN ADD-ALT. NO.1

Job No:	155-617
Date:	May 23, 2013
Scale:	AS SHOWN
Drawn By:	

ISSUED FOR ADDENDUM #1

Drawing Title:

Parklands of Floyds Fork

PROJECT 4A

Knuckles Enlarged Plans

Drawing No:

A7-105

May 21, 2013 – 4:54pm
Z:\Drawings\KY155-Floyds Fork\KY155-617 Project 4\Knuckles\Project 4 – Subset 7 – Knuckle Plans.dwg (A7-105)

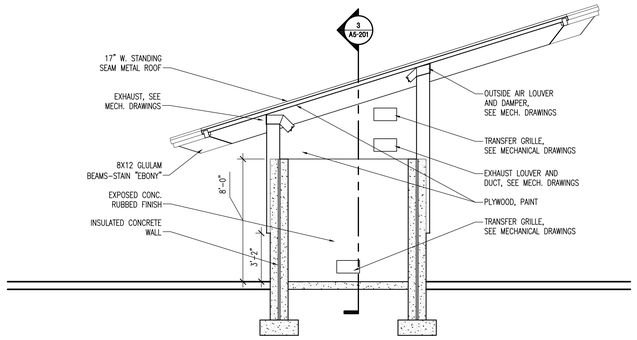

SECTION
SCALE: 1/4" = 1'-0"

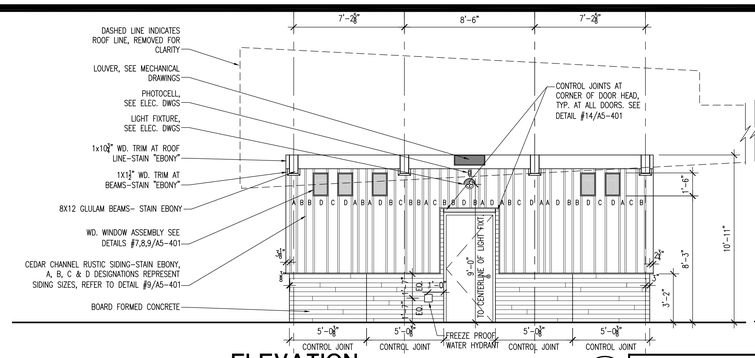

ELEVATION
SCALE: 1/4" = 1'-0"

NOTE:
ELEVATION SHOWS FULL EXTENT OF COMFORT STATION WALL.

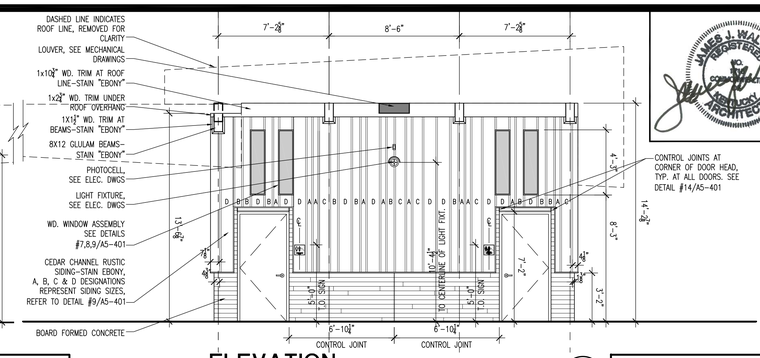

ELEVATION
SCALE: 1/4" = 1'-0"

NOTE:
ELEVATION SHOWS FULL EXTENT OF COMFORT STATION WALL.

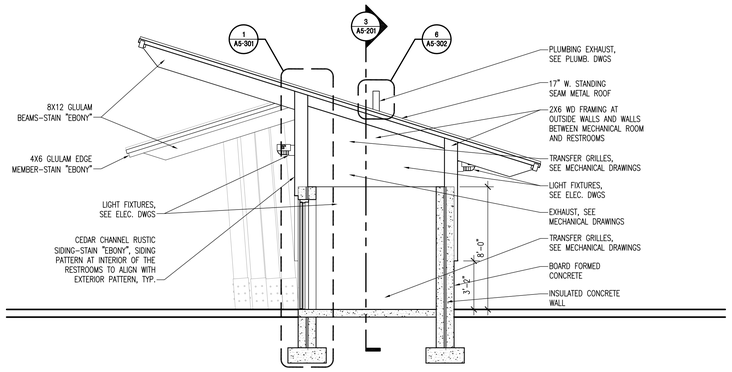

SECTION
SCALE: 1/4" = 1'-0"

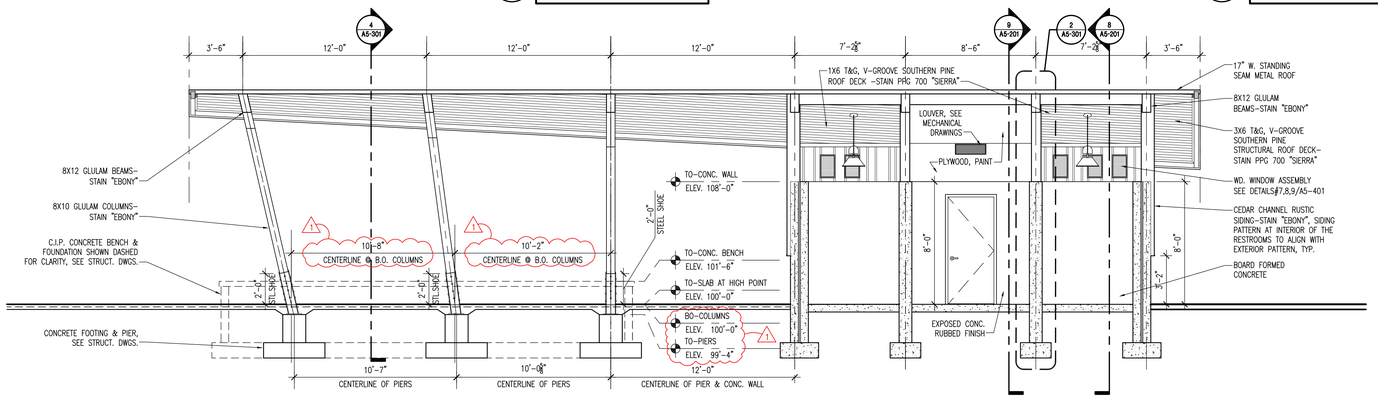

SECTION
SCALE: 1/4" = 1'-0"

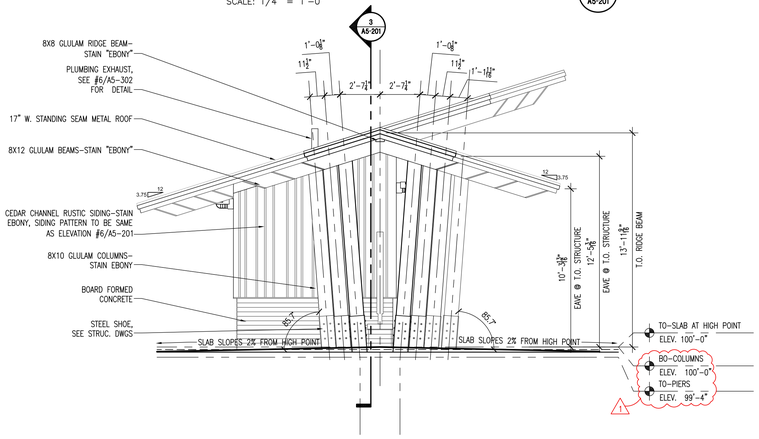

ELEVATION
SCALE: 1/4" = 1'-0"

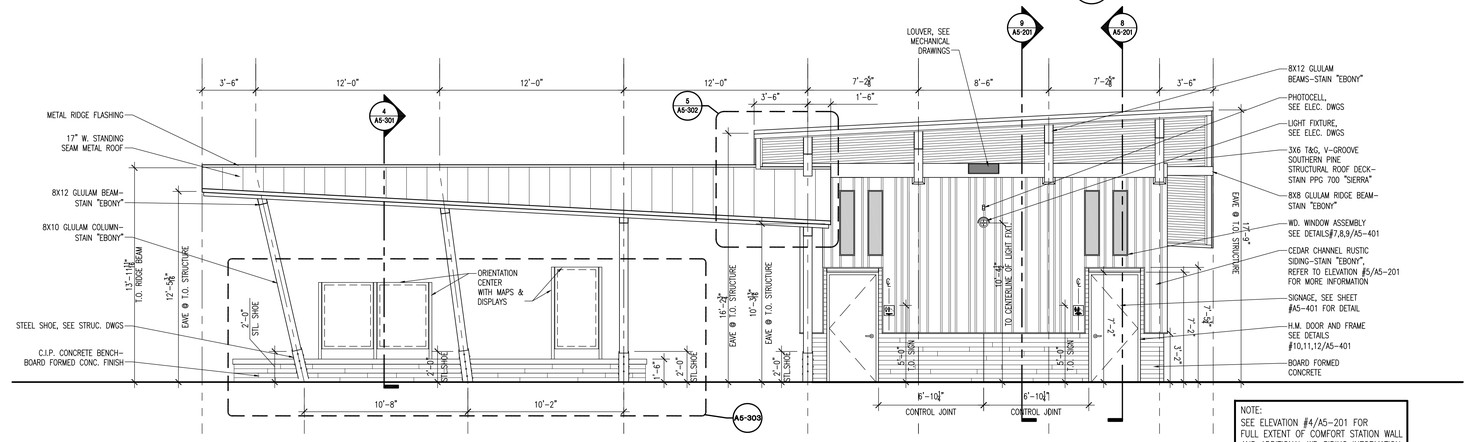

ELEVATION
SCALE: 1/4" = 1'-0"

NOTE:
SEE ELEVATION #4/A5-201 FOR FULL EXTENT OF COMFORT STATION WALL AND ADDITIONAL WD SIDING INFORMATION.

GLULAM PRESERVATIVE TREATMENT

1. ALL GLULAM MEMBERS TO BE FINISHED WITH POLYURETHANE FINISH PER SPECIFICATIONS.
2. ALL COLUMNS, BEAMS, FLY RAFTERS AND DECKING TO BE PRESERVATIVE TREATED.

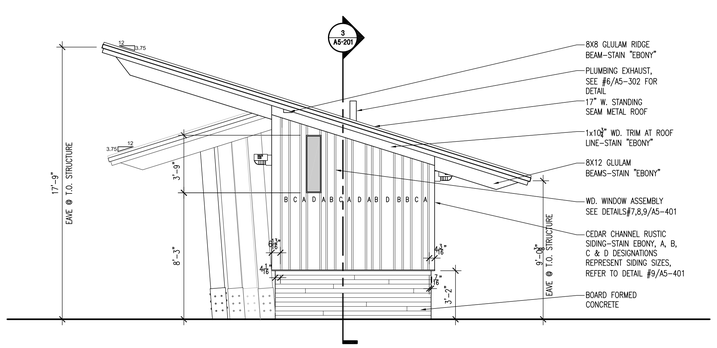

ELEVATION
SCALE: 1/4" = 1'-0"

NOTE:
SEE ELEVATION #5/A5-201 FOR FULL EXTENT OF COMFORT STATION WALL AND ADDITIONAL WD SIDING INFORMATION.

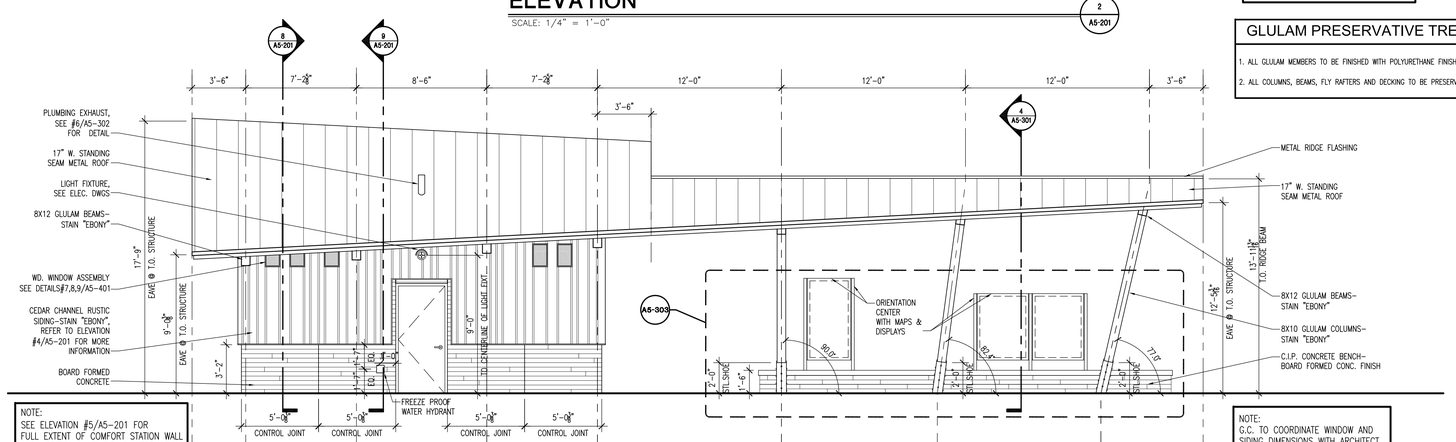

ELEVATION
SCALE: 1/4" = 1'-0"

NOTE:
G.C. TO COORDINATE WINDOW AND SIDING DIMENSIONS WITH ARCHITECT PRIOR TO FRAMING INFILL WD STUDS.

Architecture
Engineering
Planning
815 West Market Street, Suite 200, Louisville, Kentucky 40202
Phone: 502.584.9900 Fax: 502.584.0829 www.bravura.com
Kentucky · Indiana · Georgia · West Virginia · Tennessee · Florida

LANDSCAPE ARCHITECT
Wallace Roberts & Todd, LLC
1700 Market Street
28th Floor
Philadelphia, PA 19103
tel 215.732.5215
fax 215.732.2551

Architect
BRAVURA
111 West Washington Street
Louisville, Kentucky 40202
T: (502) 584-9900
F: (502) 584-0829

The Parklands of Floyds Fork, Project 4A
The Strand, Turkey Run Park and Broad Run Park
Louisville, Kentucky

Owner:
21st Century Parks, Inc.
371 W. Main St., Suite 202
Louisville, Kentucky 40202

REV #	DATE	DESCRIPTION
	05/08/2013	ISSUED FOR BID
1	05/23/2013	ADDENDUM #1: REVISED BOTTOM OF GLULAM COLUMN

Job No:	155-617
Date:	May 23, 2013
Scale:	As Shown
Drawn By:	

ISSUED FOR ADDENDUM #1

Drawing Title:
Parklands of Floyds Fork

PROJECT 4A
Seaton Valley
2-Hole Trailhead
Elevations & Sections

Drawing No:
A5-201

May 21, 2013 – 4:43pm
Z:\Drawings\K\155-Floyds Fork\K1155-617 Project 4\Structures\2-Hole Restroom Seatonville\A5-201.dwg (A5-201)

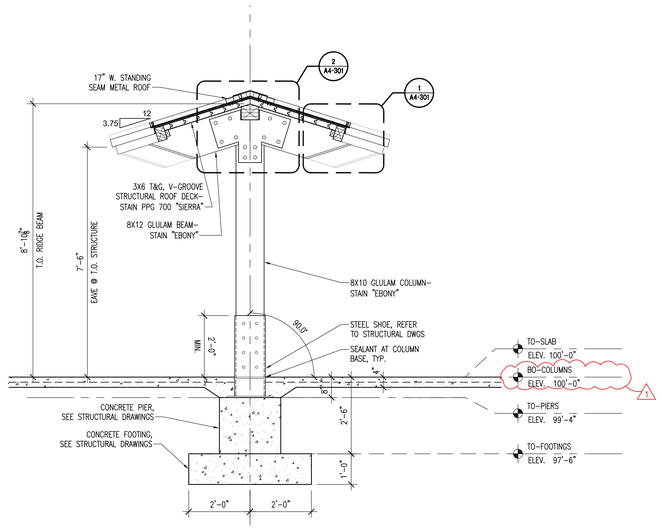

SECTION 7/A4-101

SCALE: 1/2"=1'-0"

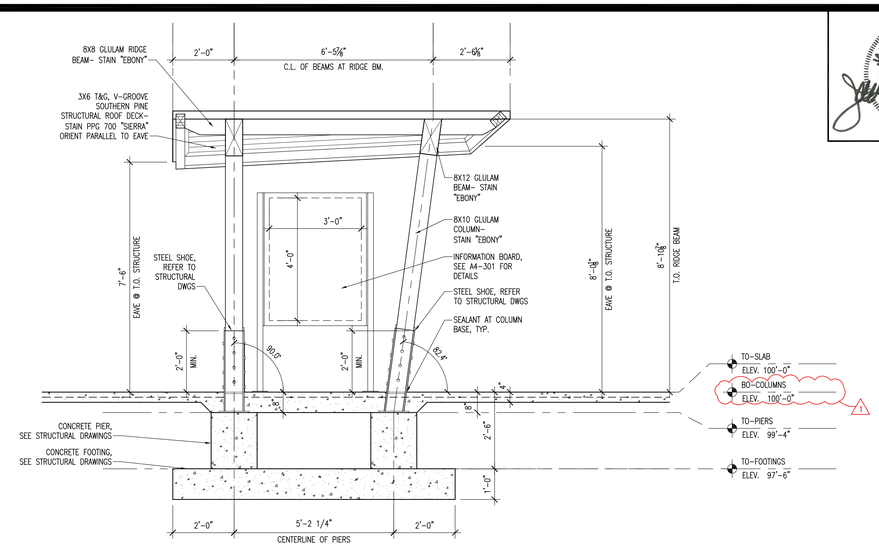

SECTION 8/A4-101

SCALE: 1/2"=1'-0"

GLULAM PRESERVATIVE TREATMENT
1. ALL GLULAM MEMBERS TO BE FINISHED WITH POLYURETHANE FINISH PER SPECIFICATIONS.
2. ALL COLUMNS, BEAMS, FLY RAFTERS AND DECKING TO BE PRESERVATIVE TREATED.

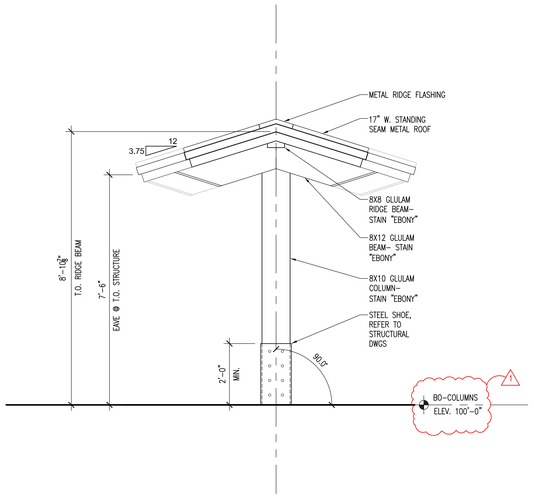

ELEVATION 5/A4-101

SCALE: 1/2"=1'-0"

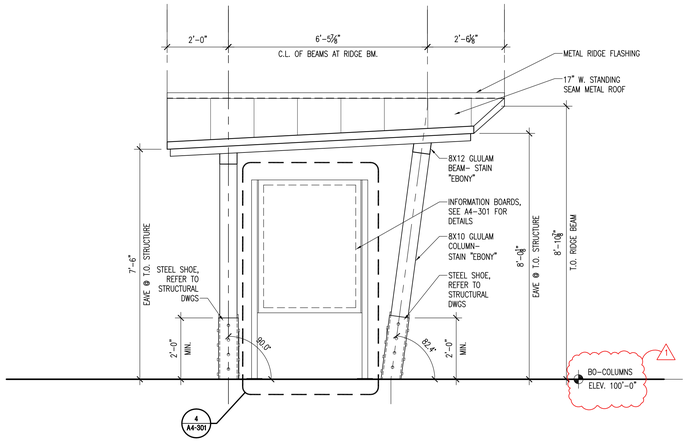

ELEVATION 4/A4-101

SCALE: 1/2"=1'-0"

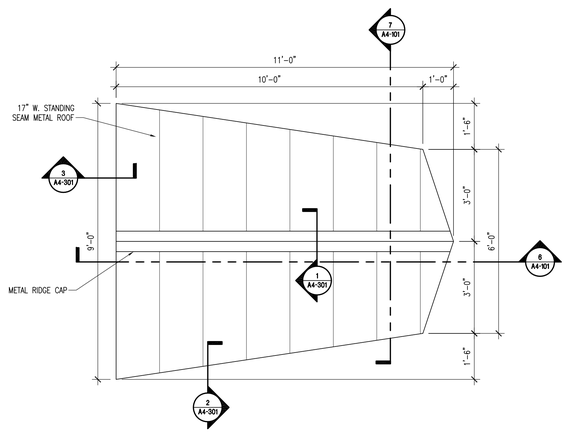

ROOF PLAN 3/A4-101

SCALE: 1/2"=1'-0"

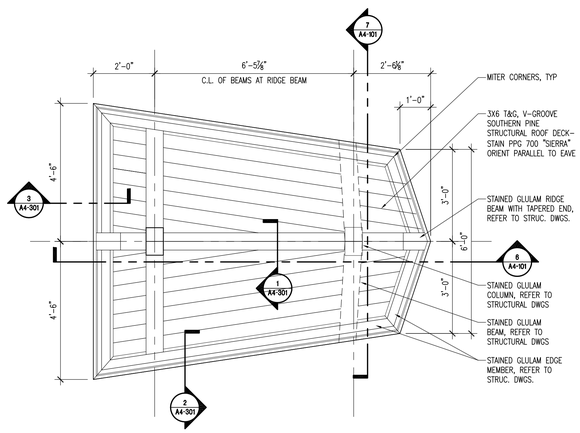

REFLECTED CEILING 2/A4-101

SCALE: 1/2"=1'-0"

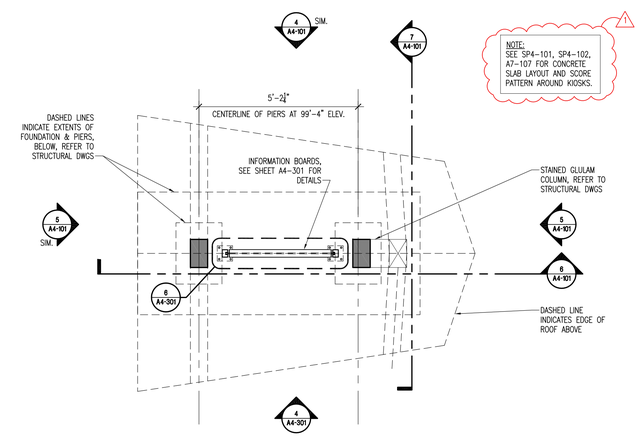

NOTE:
SEE SP4-101, SP4-102, A7-107 FOR CONCRETE SLAB LAYOUT AND SCORE PATTERN AROUND KIOSKS.

PLAN 1/A4-101

SCALE: 1/2"=1'-0"

Architecture
Engineering
Planning
815 West Market Street, Suite 300, Louisville, Kentucky 40202
Phone: 502-585-2222 Facsimile: 502-992-0005 Internet: www.qk4.com
Kentucky · Indiana · Georgia · West Virginia · Tennessee · Florida

LANDSCAPE ARCHITECT
Wallace Roberts & Todd, LLC
1700 Market Street
28th Floor
Philadelphia, PA 19103
tel 215.732.5215
fax 215.732.2551

Architect
BRAVURA
111 West Washington Street
Louisville, Kentucky 40202
T: (502) 584-0809
F: (502) 584-0829

The Parklands of Floyds Fork, Project 4A

The Strand, Turkey Run Park and Broad Run Park
Louisville, Kentucky

Owner:
21st Century Parks, Inc.
371 W. Main St., Suite 202
Louisville, Kentucky 40202

REV #	DATE	DESCRIPTION
	06/06/2013	ISSUED FOR BID
1	10/03/2013	ADDENDUM #1 (1) REVISED BOTTOM OF GLULAM COLUMN (2) REVISED DRAWING NUMBERS IN NOTE

Job No:	155-617
Date:	May 23, 2013
Scale:	As Shown
Drawn By:	

ISSUED FOR ADDENDUM #1

Drawing Title:
Parklands of Floyds Fork
PROJECT 4A
Sugar Hill, Silo Center & Big Vista Kiosks
Plans, Elevations, & Sections

Drawing No:
A4-101

May 21, 2013 - 4:58pm
Z:\Drawings\KY135-Floyds Fork\KY135-617 Project 4\Structure\Kiosk-Sugar Hill\A4-101-A4-301_Kiosks.dwg (A4-101)

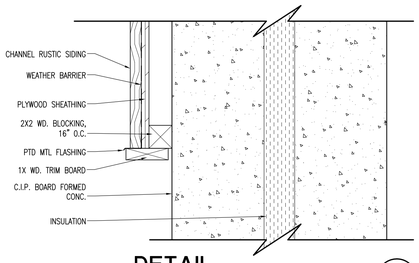

DETAIL
SCALE: 3"=1'-0" AT WALL (13 / A1-401)

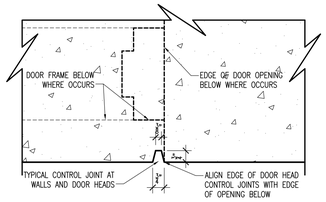

DETAIL
SCALE: 3"=1'-0" AT CONTROL JOINT (14 / A1-401)

GLULAM PRESERVATIVE TREATMENT

1. ALL GLULAM MEMBERS TO BE FINISHED WITH POLYURETHANE FINISH PER SPECIFICATIONS.
2. ALL COLUMNS, BEAMS, RAFTERS AND DECKING TO BE PRESERVATIVE TREATED.

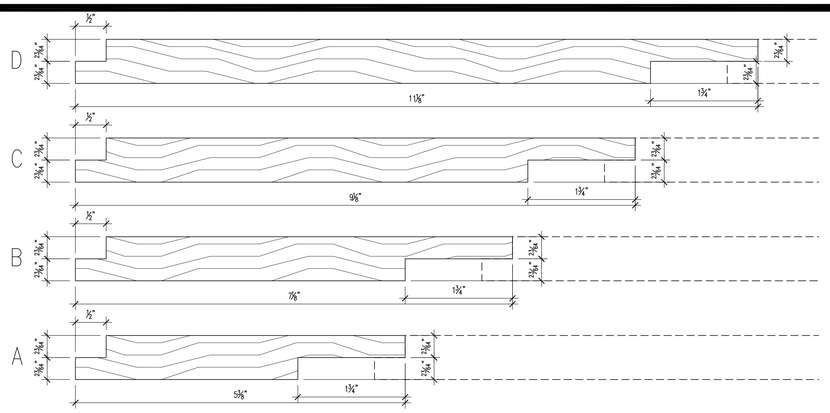

SIDING SIZES
SCALE: 1"=1" CEDAR CHANNEL RUSTIC SIDING (9 / A1-401)

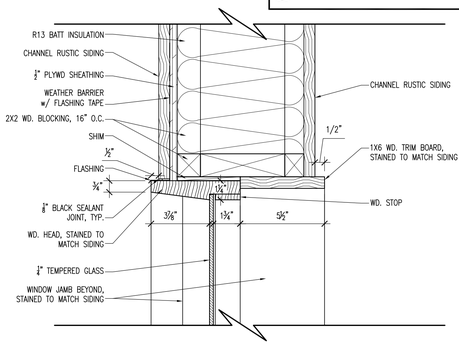

HEAD DETAIL
SCALE: 3"=1'-0" AT WINDOW (7 / A1-401)

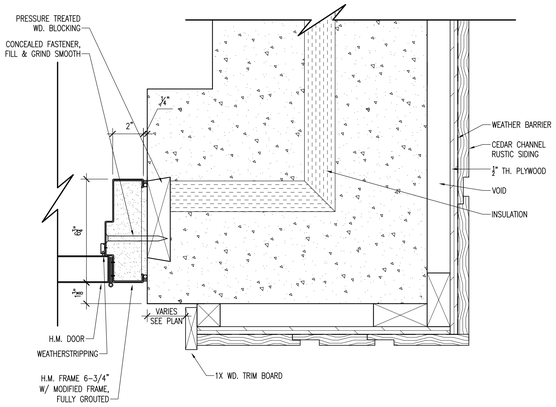

JAMB DETAIL
SCALE: 3"=1'-0" AT DOOR (12 / A1-401)

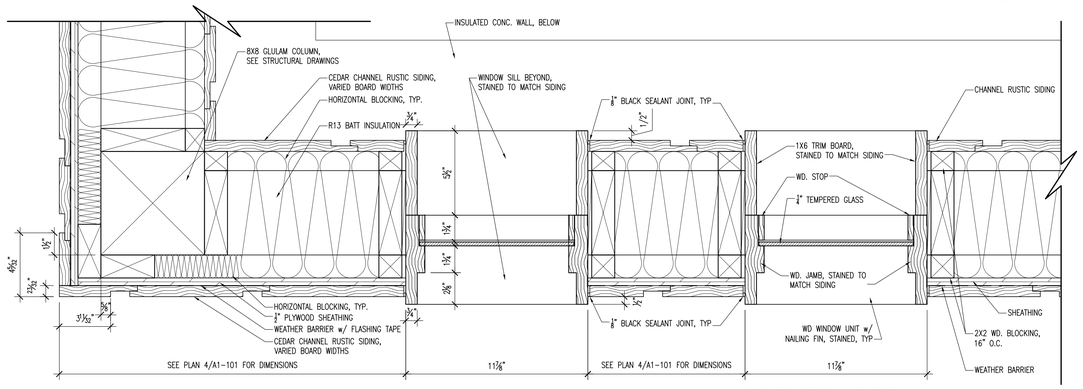

CORNER DETAIL
SCALE: 3"=1'-0" AT UPPER WALL (8 / A1-401)

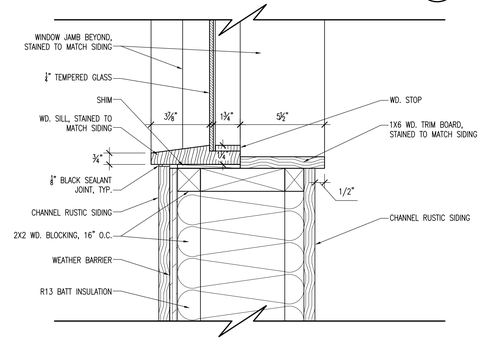

SILL DETAIL
SCALE: 3"=1'-0" AT WINDOW (6 / A1-401)

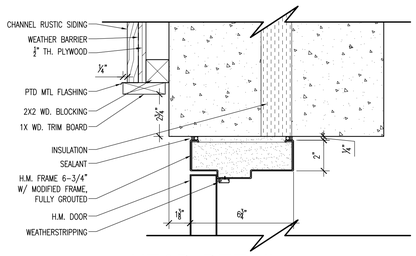

HEAD DETAIL
SCALE: 3"=1'-0" AT DOOR (11 / A1-401)

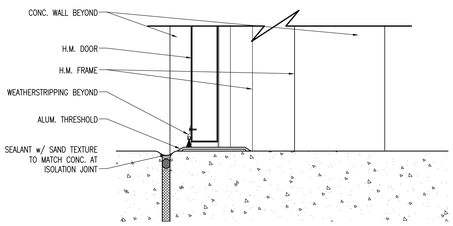

SILL DETAIL
SCALE: 3"=1'-0" AT DOOR (10 / A1-401)

NOTE:
G.C. TO COORDINATE WINDOW AND SIDING DIMENSIONS WITH ARCHITECT PRIOR TO FRAMING INFILL WD STUDS.

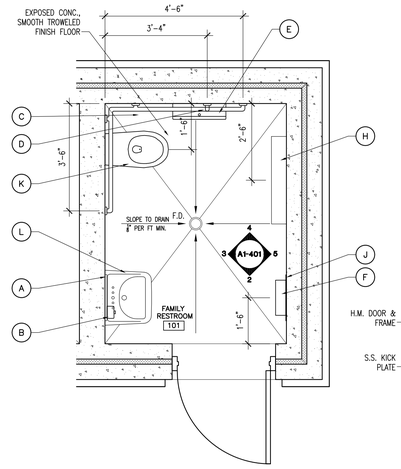

ENLARGED PLAN
SCALE: 1/2"=1'-0" FAMILY RESTROOM T101 (1 / A1-401)

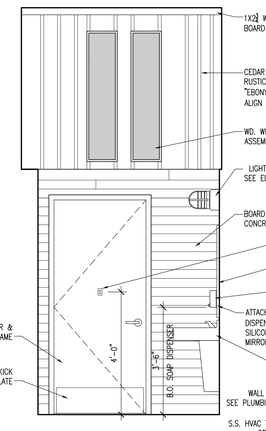

INT. ELEVATION
SCALE: 1/2"=1'-0" FAMILY RESTROOM T101 (2 / A1-401)

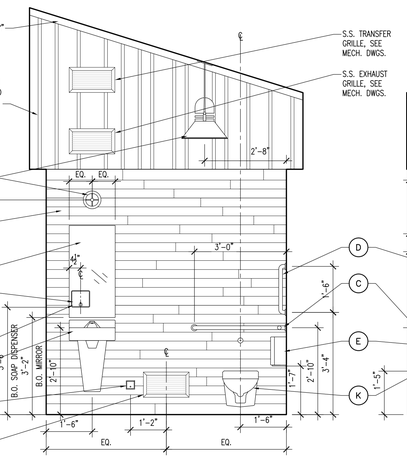

INT. ELEVATION
SCALE: 1/2"=1'-0" FAMILY RESTROOM T101 (3 / A1-401)

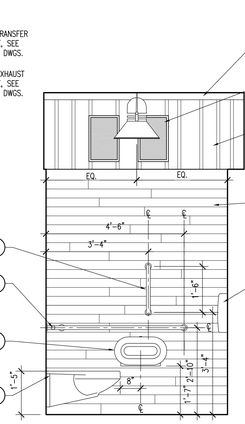

INT. ELEVATION
SCALE: 1/2"=1'-0" FAMILY RESTROOM T101 (4 / A1-401)

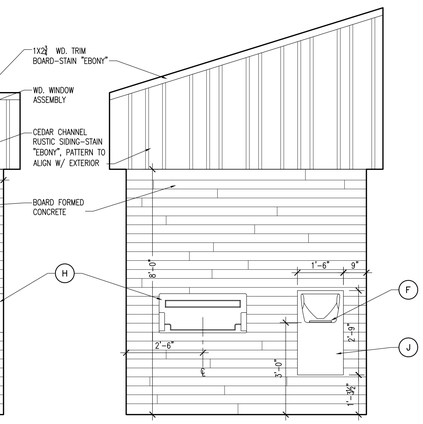

INT. ELEVATION
SCALE: 1/2"=1'-0" FAMILY RESTROOM T101 (5 / A1-401)

SIGNAGE

FAMILY RESTROOM ADA ACRYLIC SIGNAGE. USE COMPLIANCE SIGNS PRODUCT #RRE-170_WHITE_ON_BLACK, OR EQUAL

FAMILY RESTROOM 101

RESTROOM ADA ACRYLIC SIGNAGE. USE COMPLIANCE SIGNS PRODUCT #RRE-115_WHITE_ON_BLACK, OR EQUAL

RESTROOM 102

DOOR & FRAME SCHEDULE

DOOR NO.	DOORS SIZE	MATERIAL	FINISH	TYPE	FRAMES MATERIAL	TYPE	DEPTH	DETAILS HEAD	JAMB	SILL	RATING	HRDW. SET	REMARKS
101	3'-0" X 7'-0" X 1 3/4"	HM	PAINTED	A	HM	–	6 3/4"	11/A1-401	12/A1-401	10/A1-401	–	1	
102	3'-0" X 7'-0" X 1 3/4"	HM	PAINTED	A	HM	–	6 3/4"	11/A1-401	12/A1-401	10/A1-401	–	1	
103	3'-0" X 7'-0" X 1 3/4"	HM	PAINTED	A	HM	–	6 3/4"	11/A1-401	12/A1-401	10/A1-401	–	2	

DOOR TYPES

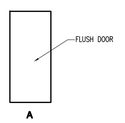

A

TOILET ACCESSORIES

- (A) CHANNEL FRAME MIRROR — AMERICAN SPECIALTIES–0620
- (B) SOAP DISPENSER — AMERICAN SPECIALTIES–9343
- (C) L-SHAPED GRAB BAR — AMERICAN SPECIALTIES–3700 TYPE 56
- (D) VERTICAL GRAB BAR — AMERICAN SPECIALTIES–3700 TYPE 1
- (E) JUMBO ROLL TOILET PAPER DISPENSER — AMERICAN SPECIALTIES–0040
- (F) WALL MOUNTED HAND DRYER — AMERICAN SPECIALTIES–0195
- (G) COAT HOOK — AMERICAN SPECIALTIES–8425
- (H) CHANGING STATION (AT FAMILY RESTROOM 101) — AMERICAN SPECIALTIES–9012
- (J) .0625" BRUSHED STAINLESS STEEL PANEL w/CONCEALED FASTENING & EASED CORNERS
- (K) WALL MOUNTED TOILET — REFER TO PLUMBING FIXTURE SCHEDULE
- (L) WALL MOUNTED SINK — REFER TO PLUMBING FIXTURE SCHEDULE

JAMES J. WALTERS REGISTERED NO. 5699 KENTUCKY ARCHITECT

Architecture Engineering Planning
815 West Market Street, Suite 300, Louisville, Kentucky 40202
Phone: 502-585-2222 Facsimile: 502-992-0005 Internet: www.qk4.com
Kentucky · Indiana · Georgia · West Virginia · Tennessee · Florida

LANDSCAPE ARCHITECT
Wallace Roberts & Todd, LLC
1700 Market Street
28th Floor
Philadelphia, PA 19103
tel 215.732.5215
fax 215.732.2551

Architect
BRAVURA
111 West Washington Street
Louisville, Kentucky 40202
P: (502) 584-0029
F: (502) 584-0029

The Parklands of Floyds Fork, Project 4A
The Strand, Turkey Run Park and Broad Run Park
Louisville, Kentucky

Owner:
21st Century Parks, Inc.
371 W. Main St., Suite 202
Louisville, Kentucky 40202

REV #	DATE	DESCRIPTION
	06/06/2013	ISSUED FOR BID
1	06/25/2013	ADDENDUM #1 REVISED TITLE TO READ, "ADD-ALT. NO.2"

Job No:	155-617
Date:	May 23, 2013
Scale:	As Shown
Drawn By:	

ISSUED FOR ADDENDUM #1

Drawing Title:
Parklands of Floyds Fork
ADD-ALT. NO. 2
PROJECT 4A
The Strand
2-Hole Trailhead
Int. Elevs.,Dtls. & Schd.

Drawing No:
A1-401

May 21, 2013 – 5:03pm
Z:\Drawings\K155-Floyds Fork\K155-617 Project 4\Structure\2-Hole Restrooms\A1-401.dwg (A1-401)

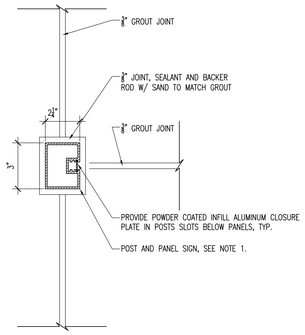

PLAN DETAIL BELOW PANEL

SCALE: 3"=1'-0" COMFORT STATION DISPLAY 4 A1-303

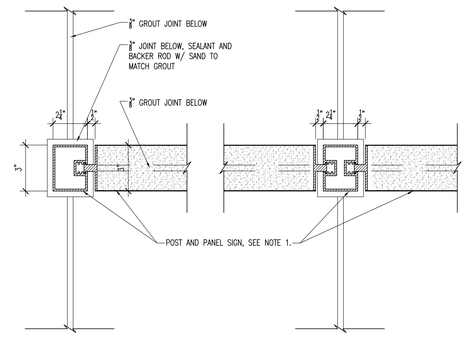

PLAN DETAIL AT PANEL

SCALE: 3"=1'-0" COMFORT STATION DISPLAY 3 A1-303

NOTES:
1. FACTORY PAINTED ALUMINUM POST AND DOUBLE PANEL SIGN. FLUSH PANELS CHEMICALLY BONDED TO POLYSTYRENE CORE. ASSEMBLY SLIDES INTO SLOTTED 2-1/4" X 3" RECTANGULAR MOUNTING POSTS HELD AWAY TO CREATE 1/2" REVEAL BETWEEN POST AND PANEL W/ CONCEALED LOCKING SQUARE TO SECURE ASSEMBLY. BASIS OF DESIGN: HOWARD INDUSTRIES "HED" POST AND PANEL COMPONENTS. COLOR: BLACK.

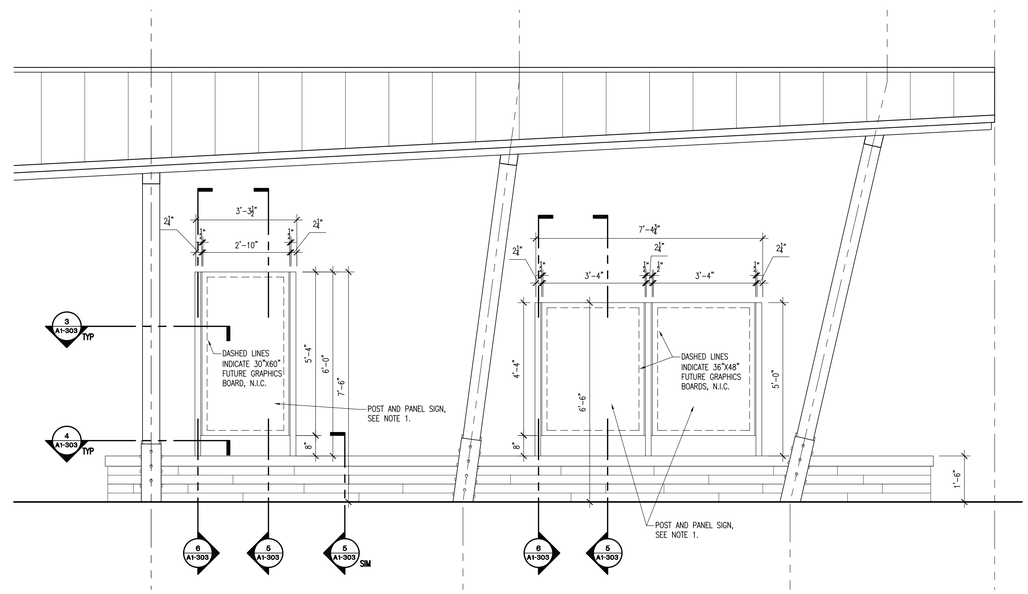

PARTIAL ELEVATION

SCALE: 1/2"=1'-0" COMFORT STATION BENCH 2 A1-303

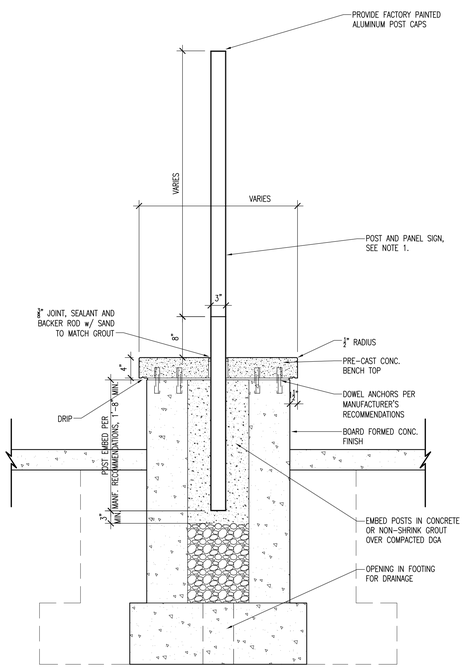

SECTION DETAIL AT POST

SCALE: 1"=1'-0" COMFORT STATION BENCH 6 A1-303

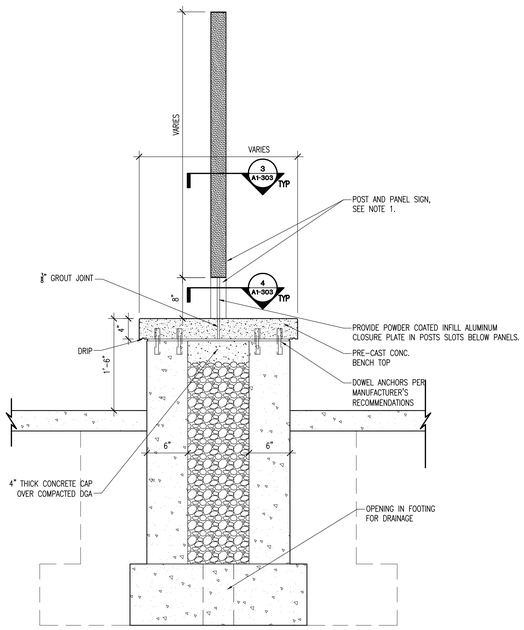

SECTION DETAIL

SCALE: 1"=1'-0" COMFORT STATION BENCH 5 A1-303

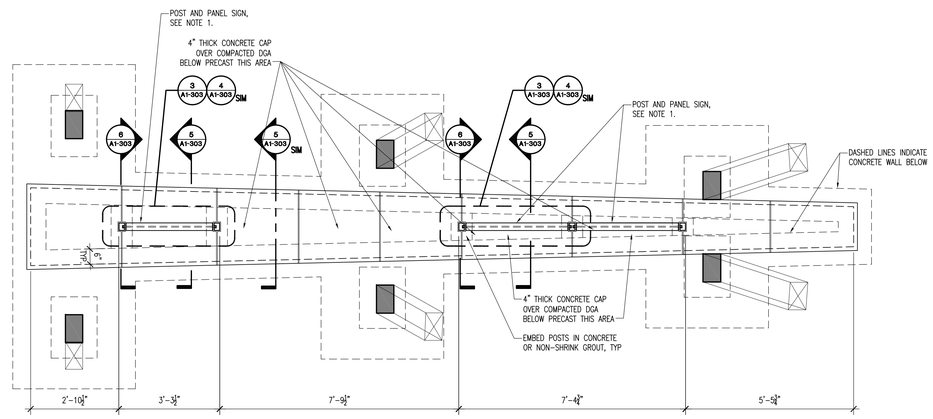

PARTIAL PLAN

SCALE: 1/2"=1'-0" TRAILHEAD BENCH 1 A1-303

Architecture
Engineering
Planning
815 West Market Street, Suite 300 Louisville, Kentucky 40202
Phone: 502-585-2222 Facsimile: 502-992-0005 Internet: www.qk4.com
Kentucky · Indiana · Georgia · West Virginia · Tennessee · Florida

LANDSCAPE ARCHITECT
Wallace Roberts & Todd, LLC
1700 Market Street
28th Floor
Philadelphia, PA 19103
tel 215.732.5215
fax 215.732.2551

Architect
BRAVURA
111 West Washington Street
Louisville, Kentucky 40202
P: (502) 584-7200
F: (502) 584-0829

The Parklands of Floyds Fork, Project 4A

The Strand, Turkey Run Park and Broad Run Park
Louisville, Kentucky

Owner:
21st Century Parks, Inc.
371 W. Main St., Suite 202
Louisville, Kentucky 40202

REV #	DATE	DESCRIPTION
	05/08/2013	ISSUED FOR IBD
1	05/23/2013	ADDENDUM #1: REVISED TITLE TO IBD-ALT. NO.2

Job No:	155-617
Date:	May 23, 2013
Scale:	As Shown
Drawn By:	

ISSUED FOR ADDENDUM #1

Drawing Title:
1 Parklands of Floyds Fork
ADD-ALT. NO. 2
PROJECT 4A
The Strand
2-Hole Trailhead
Signage & Bench Dtls.

Drawing No:
A1-303

May 21, 2013 - 5:00pm
Z:\Drawings\KY155-Floyds Fork\KY155-617 Project 4\Structures\2-Hole Restrooms\A1-303.dwg (A1-303)

GLULAM PRESERVATIVE TREATMENT
1. ALL GLULAM MEMBERS TO BE FINISHED WITH POLYURETHANE FINISH PER SPECIFICATIONS.
2. ALL COLUMNS, BEAMS, FLY RAFTERS AND DECKING TO BE PRESERVATIVE TREATED.

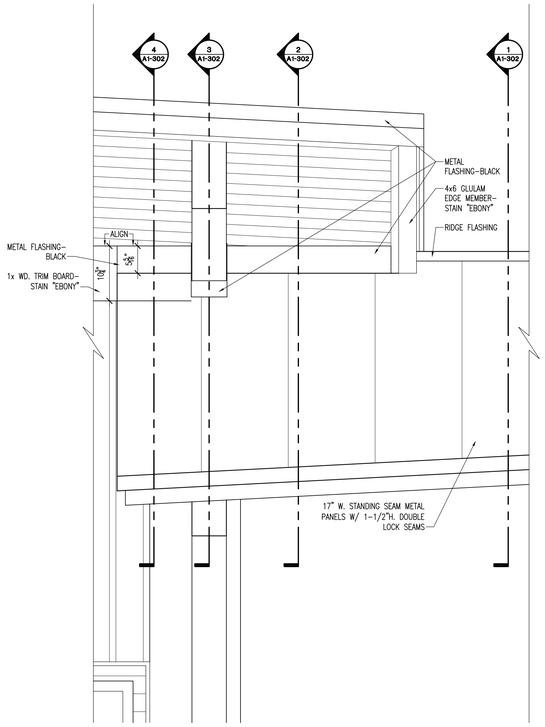

ELEVATION DETAIL

SCALE: 1"=1'-0" — AT ROOF INTERSECTION (5 / A1-302)

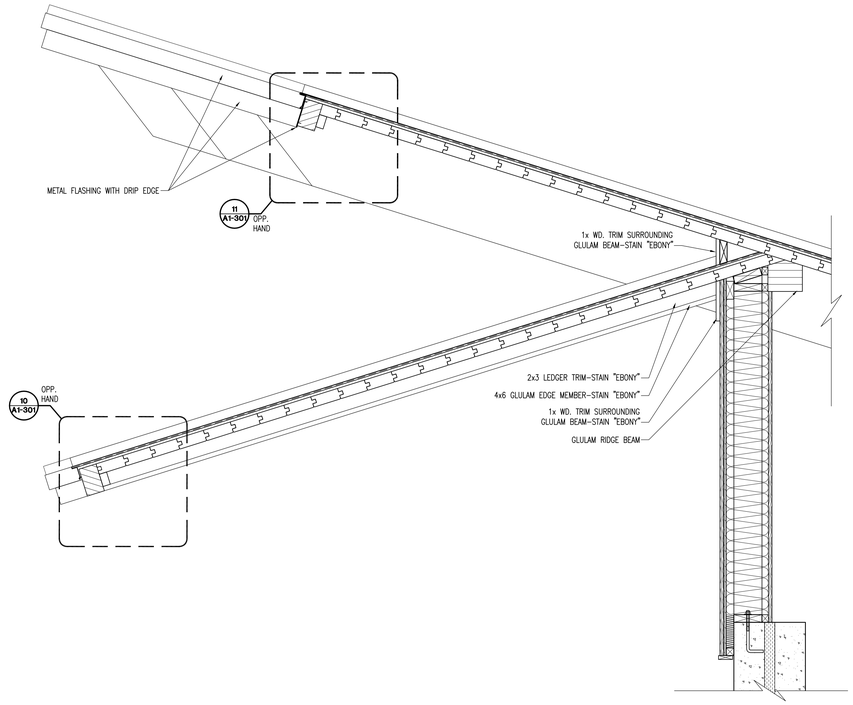

SECTION DETAIL

SCALE: 1"=1'-0" — AT ROOF INTERSECTION (4 / A1-302)

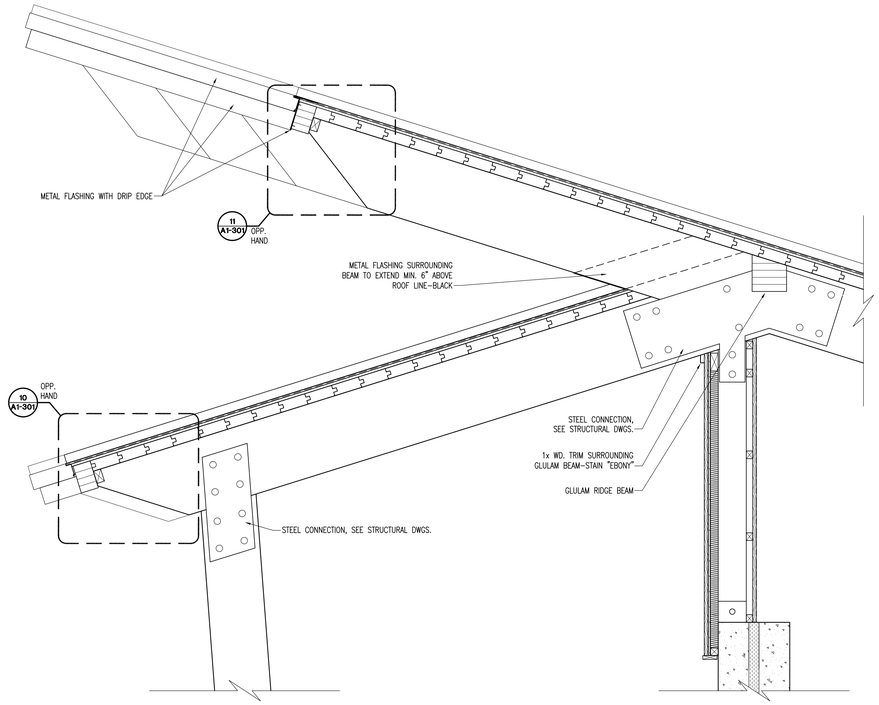

SECTION DETAIL

SCALE: 1"=1'-0" — AT ROOF INTERSECTION (3 / A1-302)

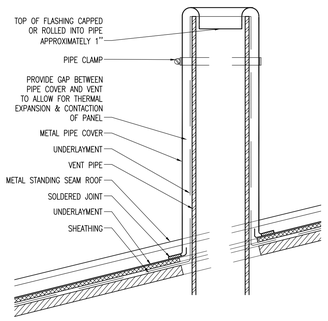

PLUMBING VENT DETAIL

SCALE: N.T.S. — AT ROOF PENETRATION (6 / A1-302)

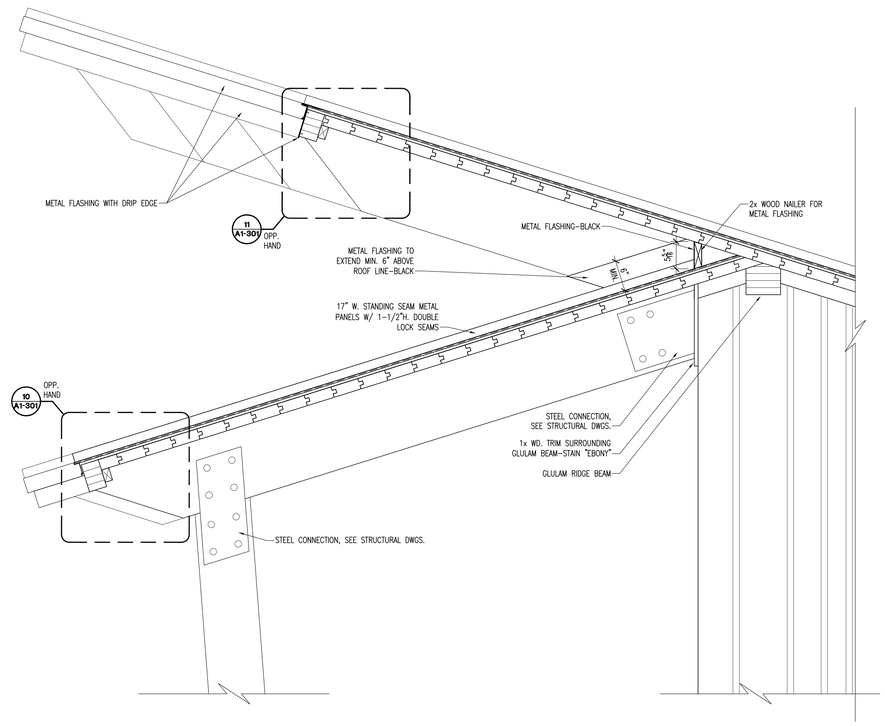

SECTION DETAIL

SCALE: 1"=1'-0" — AT ROOF INTERSECTION (2 / A1-302)

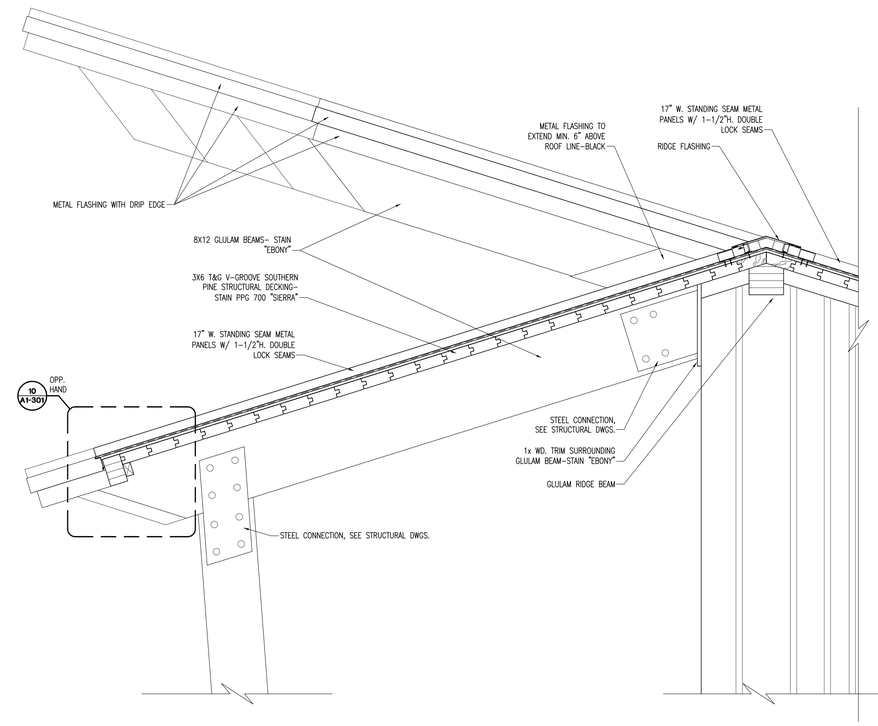

SECTION DETAIL

SCALE: 1"=1'-0" — AT ROOF INTERSECTION (1 / A1-302)

Architecture
Engineering
Planning
815 West Market Street, Suite 300, Louisville, Kentucky 40202
Phone: 502-585-2222 Facsimile: 502-992-0005 Internet: www.qk4.com
Kentucky · Indiana · Georgia · West Virginia · Tennessee · Florida

LANDSCAPE ARCHITECT
Wallace Roberts & Todd, LLC
1700 Market Street
28th Floor
Philadelphia, PA 19103
tel 215.732.5215
fax 215.732.2551

Architect
BRAVURA
111 West Washington Street
Louisville, Kentucky 40202
T: (502) 584-0000
F: (502) 584-0029

The Parklands of Floyds Fork, Project 4A

The Strand, Turkey Run Park and Broad Run Park
Louisville, Kentucky

Owner:
21st Century Parks, Inc.
371 W. Main St., Suite 202
Louisville, Kentucky 40202

REV #	DATE	DESCRIPTION
	05/08/2013	ISSUED FOR IMD
1	05/23/2013	ADDENDUM #1 - REVISED TITLE TO READ: "ADD-ALT. NO.2"

Job No:	155-617
Date:	May 23, 2013
Scale:	As Shown
Drawn By:	

ISSUED FOR ADDENDUM #1

Drawing Title:
1 Parklands of Floyds Fork
ADD-ALT. NO.2
PROJECT 4A
The Strand
2-Hole Trailhead
Roof Details

Drawing No:
A1-302

May 21, 2013 - 4:40pm
Z:\Drawings\X\155-Floyds Fork\X155-617 Project 4\Structures\2-Hole Restrooms\A1-302.dwg (A1-302)

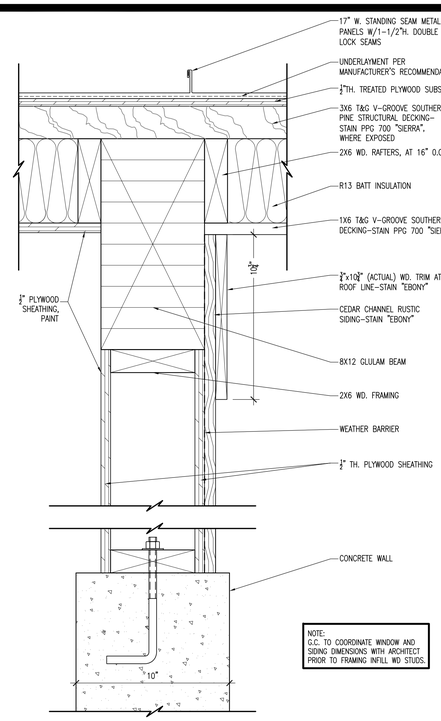

NOTE:
G.C. TO COORDINATE WINDOW AND SIDING DIMENSIONS WITH ARCHITECT PRIOR TO FRAMING INFILL WD STUDS.

SECTION DETAIL 9 / A1-301
SCALE: 3" = 1'-0"

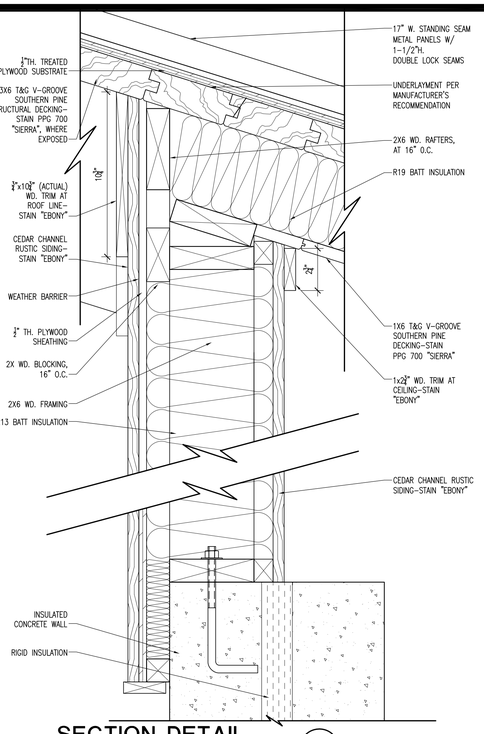

SECTION DETAIL 8 / A1-301
SCALE: 3" = 1'-0"

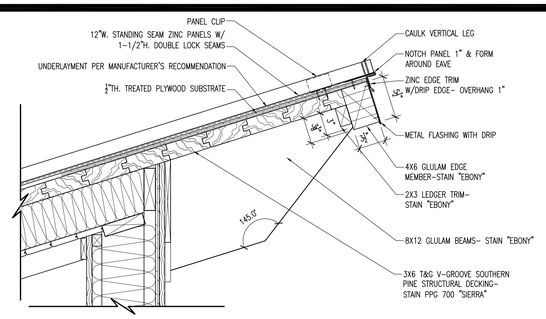

SECTION DETAIL 11 / A1-301
SCALE: 1 1/2" = 1'-0"

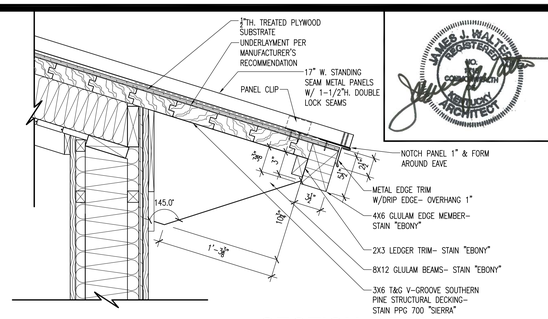

SECTION DETAIL 10 / A1-301
SCALE: 1 1/2" = 1'-0"

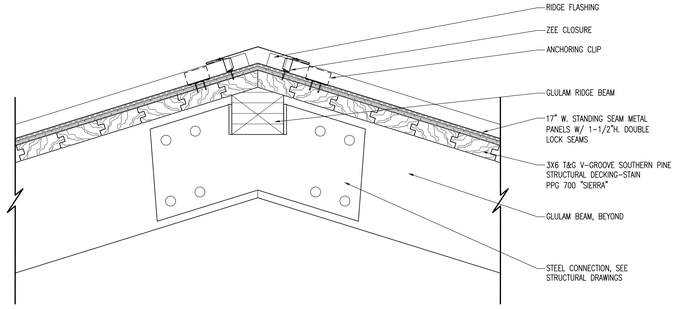

SECTION DETAIL 7 / A1-301
SCALE: 1 1/2" = 1'-0"

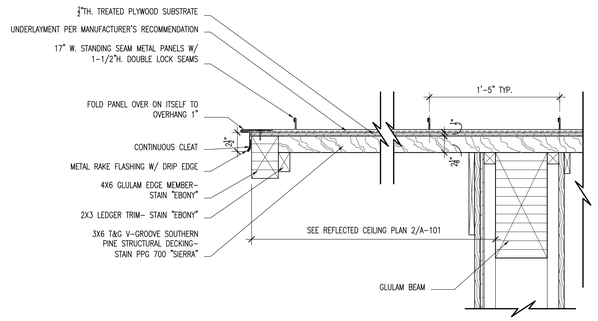

SECTION DETAIL 6 / A1-301
SCALE: 1 1/2" = 1'-0"

GLULAM PRESERVATIVE TREATMENT

1. ALL GLULAM MEMBERS TO BE FINISHED WITH POLYURETHANE FINISH PER SPECIFICATIONS.
2. ALL COLUMNS, BEAMS, FLY RAFTERS AND DECKING TO BE PRESERVATIVE TREATED.

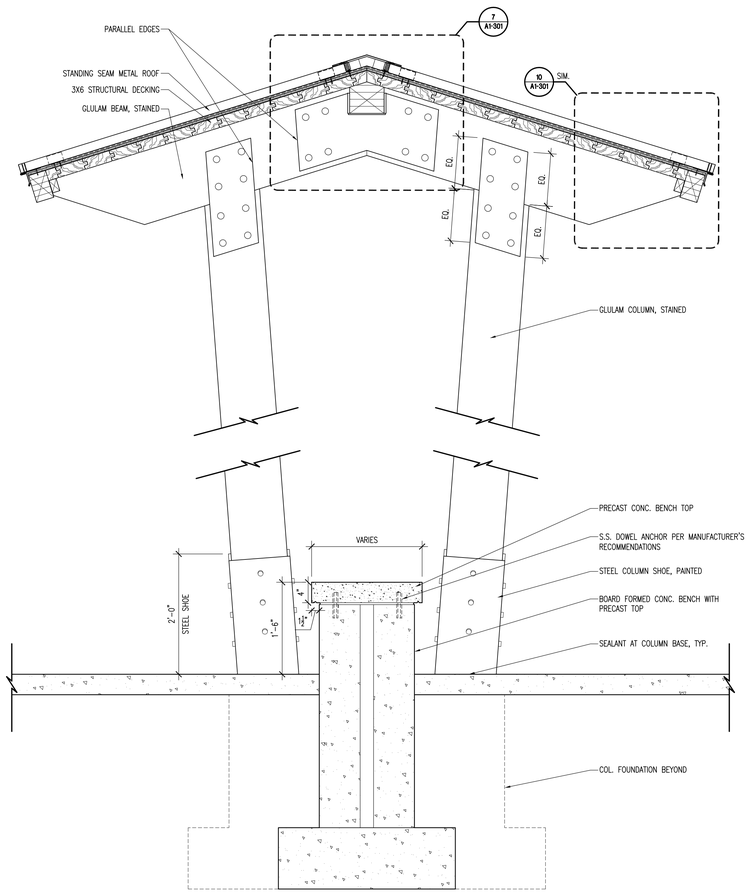

COLUMN SECTION 4 / A1-301
SCALE: 1" = 1'-0"

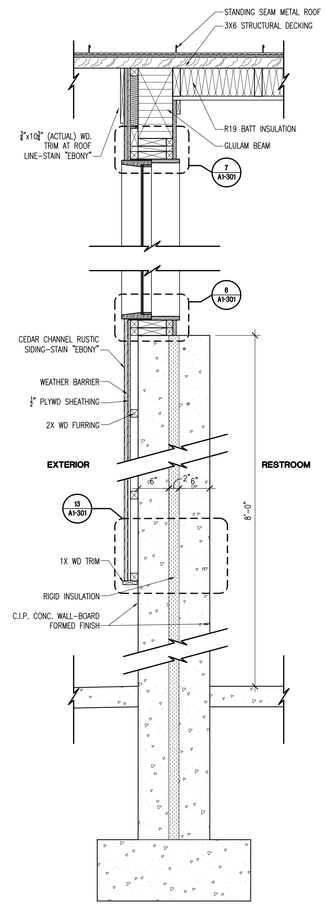

WALL SECTION 3 / A1-301
SCALE: 1" = 1'-0"

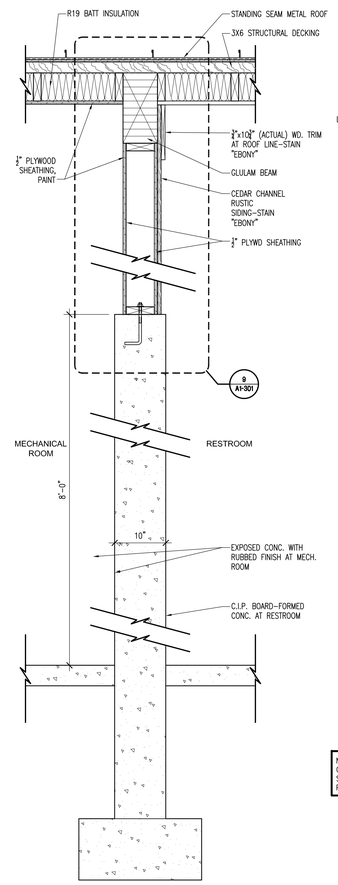

WALL SECTION 2 / A1-301
SCALE: 1" = 1'-0"

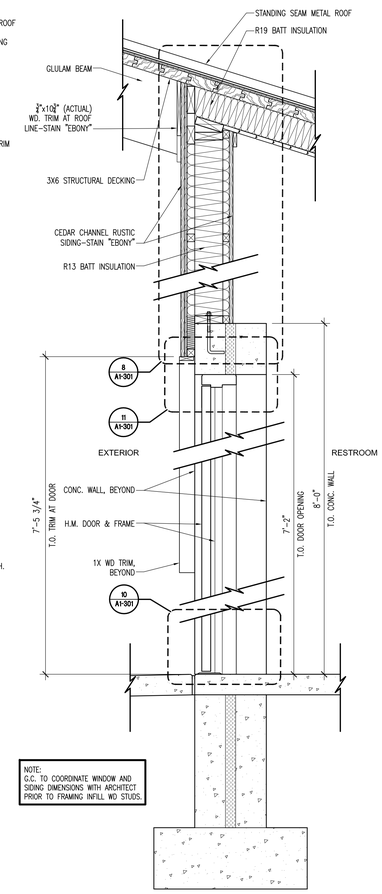

NOTE:
G.C. TO COORDINATE WINDOW AND SIDING DIMENSIONS WITH ARCHITECT PRIOR TO FRAMING INFILL WD STUDS.

WALL SECTION 1 / A1-301
SCALE: 1" = 1'-0"

JAMES J. WALTZ REGISTERED NO. 5294 KENTUCKY ARCHITECT

Architecture
Engineering
Planning
815 West Market Street, Suite 300, Louisville, Kentucky 40202
Phone: 502-585-2222 Facsimile: 502-992-0005 Internet: www.qk4.com
Kentucky · Indiana · Georgia · West Virginia · Tennessee · Florida

LANDSCAPE ARCHITECT
Wallace Roberts & Todd, LLC
1700 Market Street
28th Floor
Philadelphia, PA 19103
tel 215.732.5215
fax 215.732.2551

Architect
BRAVURA
111 West Washington Street
Louisville, Kentucky 40202
P: (502) 584-0929
F: (502) 584-0829

The Parklands of Floyds Fork, Project 4A
The Strand, Turkey Run Park and Broad Run Park
Louisville, Kentucky

Owner:
21st Century Parks, Inc.
371 W. Main St., Suite 202
Louisville, Kentucky 40202

REV #	DATE	DESCRIPTION
	05/08/2013	ISSUED FOR BID
1	05/23/2013	ADDENDUM #1 REVISED TITLE TO READ "ADD-ALT. NO.2"

Job No:	155-617
Date:	May 23, 2013
Scale:	As Shown
Drawn By:	

ISSUED FOR ADDENDUM #1

Drawing Title:
Parklands of Floyds Fork
ADD-ALT. NO.2
PROJECT 4A
The Strand
2-Hole Trailhead
Wall Sections & Dtls.

Drawing No:
A1-301

May 21, 2013 - 4:41pm
Z:\Drawings\K155-Floyds Fork\K155-617 Project 4\Structures\2-Hole Restrooms\A1-301.dwg (A1-301)

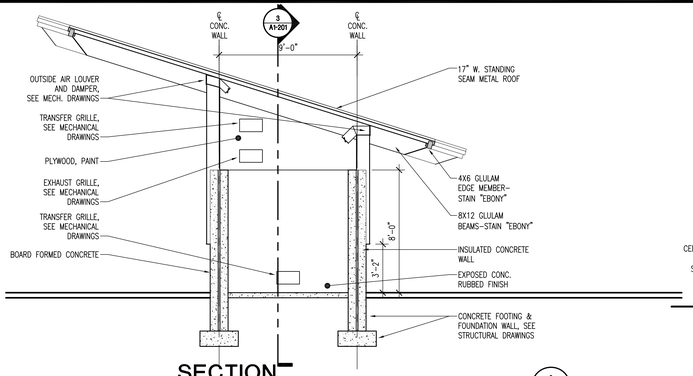

SECTION
SCALE: 1/4" = 1'-0"
9 / A1-201

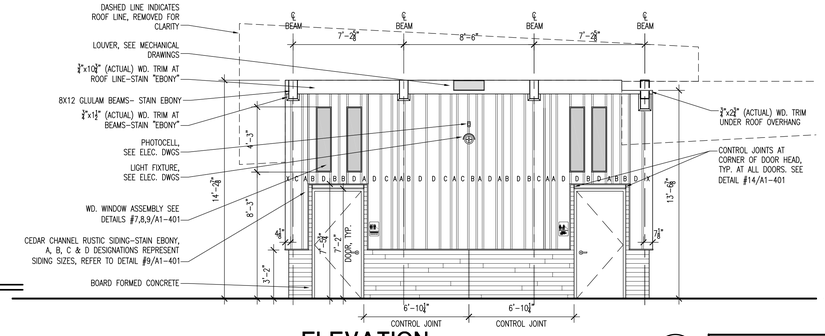

ELEVATION
SCALE: 1/4" = 1'-0"
5 / A1-201

NOTE:
ELEVATION SHOWS FULL EXTENT OF COMFORT STATION WALL.

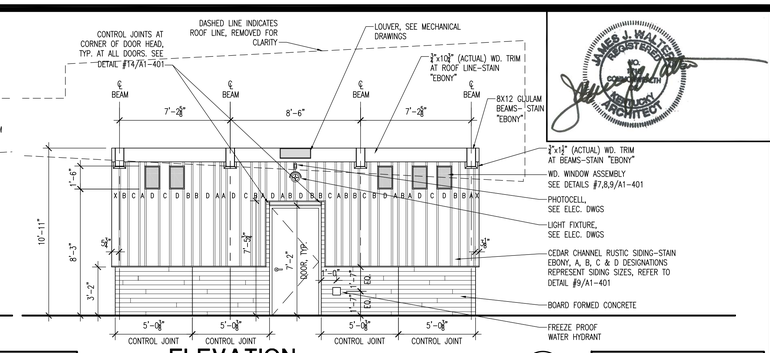

ELEVATION
SCALE: 1/4" = 1'-0"
4 / A1-201

NOTE:
ELEVATION SHOWS FULL EXTENT OF COMFORT STATION WALL.

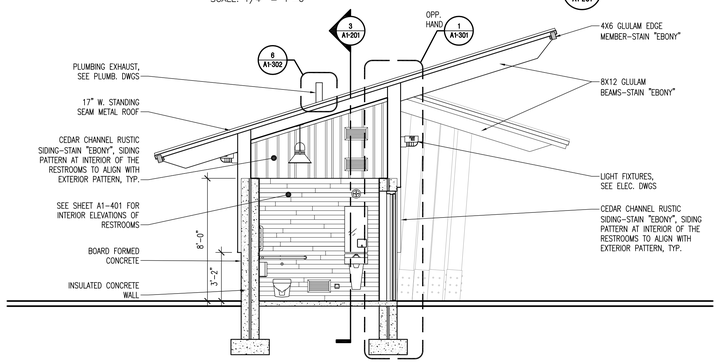

SECTION
SCALE: 1/4" = 1'-0"
8 / A1-201

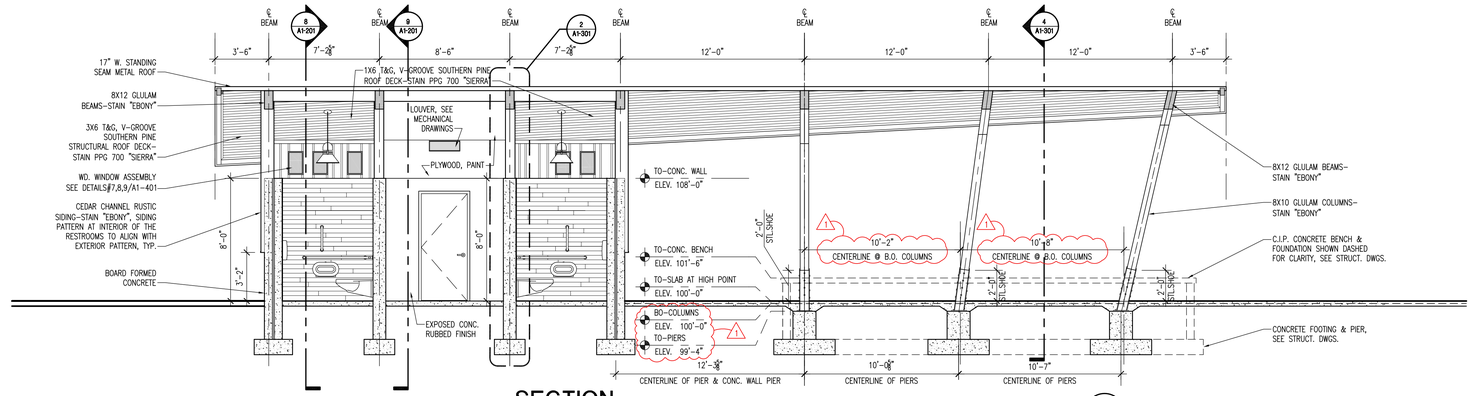

SECTION
SCALE: 1/4" = 1'-0"
3 / A1-201

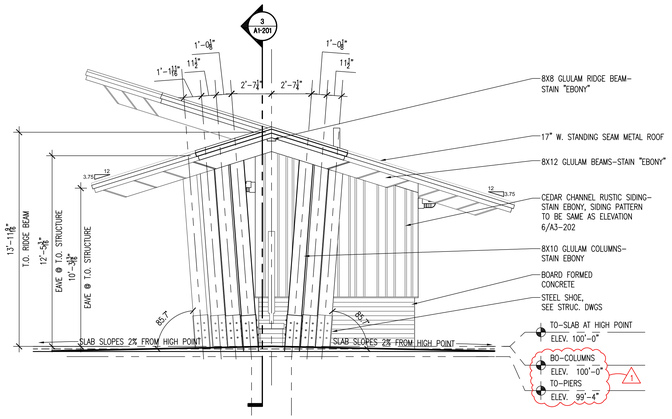

ELEVATION
SCALE: 1/4" = 1'-0"
7 / A1-201

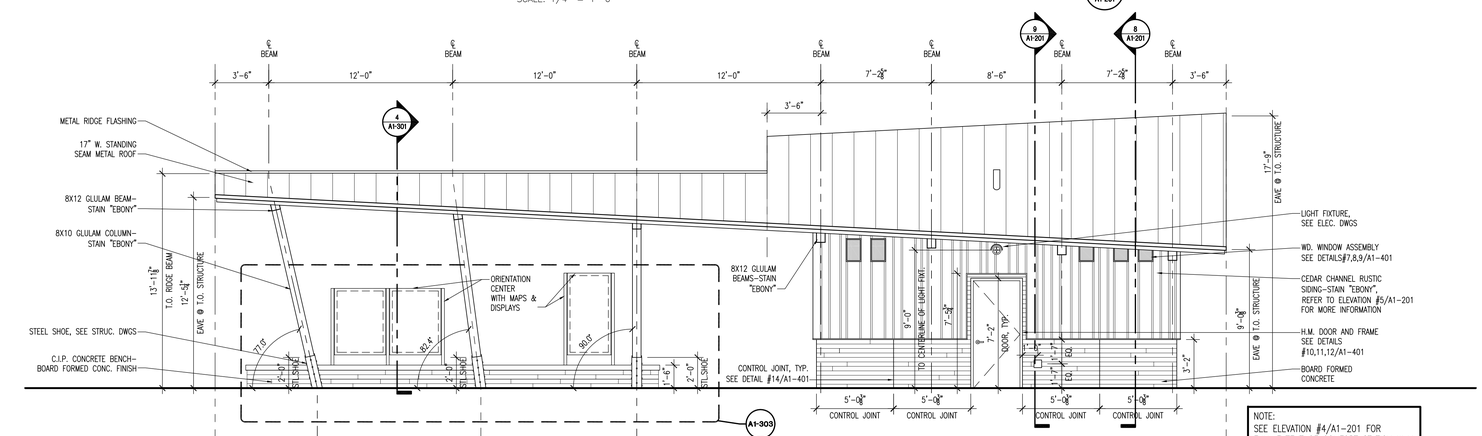

ELEVATION
SCALE: 1/4" = 1'-0"
2 / A1-201

NOTE:
SEE ELEVATION #4/A1-201 FOR FULL EXTENT OF COMFORT STATION WALL AND ADDITIONAL WD SIDING INFORMATION.

GLULAM PRESERVATIVE TREATMENT

1. ALL GLULAM MEMBERS TO BE FINISHED WITH POLYURETHANE FINISH PER SPECIFICATIONS.
2. ALL COLUMNS, BEAMS, FLY RAFTERS AND DECKING TO BE PRESERVATIVE TREATED.

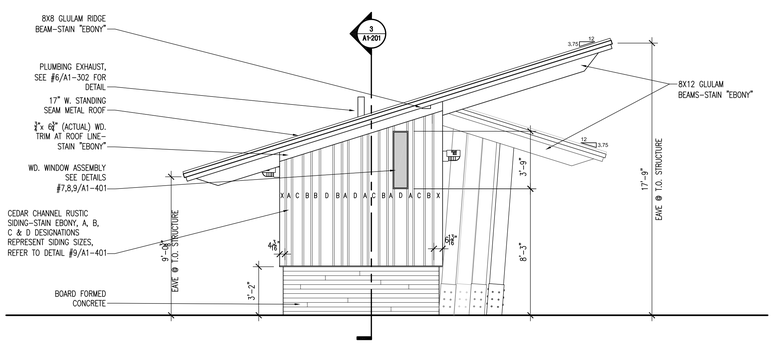

ELEVATION
SCALE: 1/4" = 1'-0"
6 / A1-201

NOTE:
SEE ELEVATION #5/A1-201 FOR FULL EXTENT OF COMFORT STATION WALL AND ADDITIONAL WD SIDING INFORMATION.

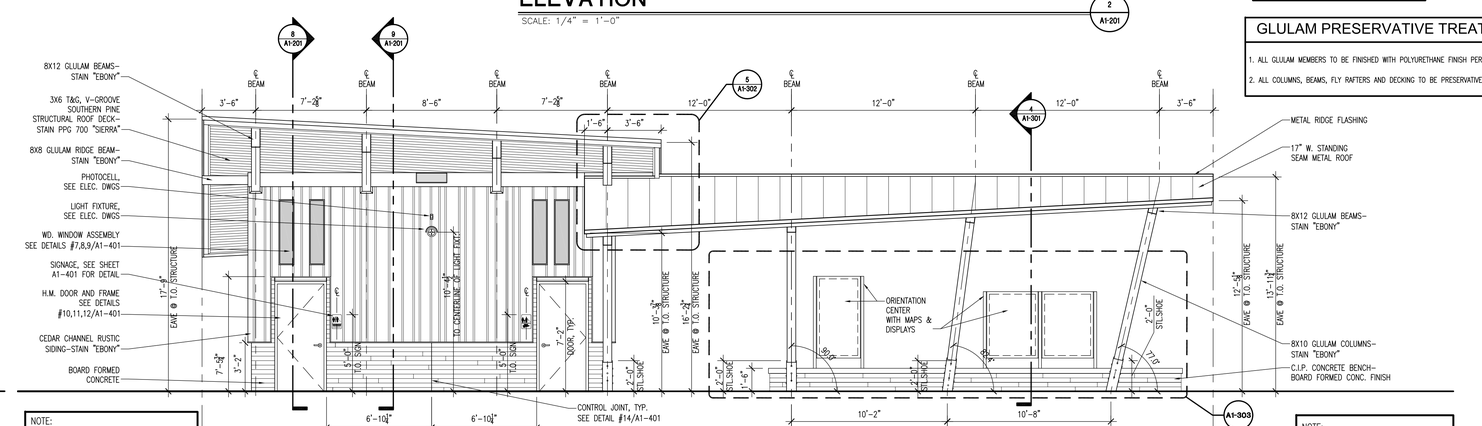

ELEVATION
SCALE: 1/4" = 1'-0"
1 / A1-201

NOTE:
G.C. TO COORDINATE WINDOW AND SIDING DIMENSIONS WITH ARCHITECT PRIOR TO FRAMING INFILL WD STUDS.

Architecture
Engineering
Planning

815 West Market Street, Suite 200, Louisville, Kentucky 40202
Phone: 502.584.9900 Fax: 502.584.9904 www.bravura.com
Kentucky · Indiana · Georgia · West Virginia · Tennessee · Florida

LANDSCAPE ARCHITECT
Wallace Roberts & Todd, LLC
1700 Market Street
28th Floor
Philadelphia, PA 19103
tel 215.732.5215
fax 215.732.2551

Architect
BRAVURA
111 West Washington Street
Louisville, Kentucky 40202
T: (502) 584-9900
F: (502) 584-0829

The Parklands of Floyds Fork, Project 4A
The Strand, Turkey Run Park and Broad Run Park
Louisville, Kentucky

Owner:
21st Century Parks, Inc.
371 W. Main St., Suite 202
Louisville, Kentucky 40202

REV #	DATE	DESCRIPTION
	06/08/2013	ISSUED FOR BID
1	05/23/2013	ADDENDUM #1: (1) REVISED TITLE TO READ "ADD-ALT. NO.2" (2) REVISED BOTTOM OF GLULAM COLUMN

Job No:	155-617
Date:	May 23, 2013
Scale:	As Shown
Drawn By:	
ISSUED FOR ADDENDUM #1	

Drawing Title:
1 Parklands of Floyds Fork
ADD-ALT. NO.2
PROJECT 4A
The Strand
2-Hole Trailhead
Elevations & Sections

Drawing No:
A1-201

May 21, 2013 - 4:50pm
Z:\Drawings\K1155-Floyds Fork\K1155-617 Project 4\Structures\2-Hole Restrooms\A1-201.dwg (A1-201)

GLULAM PRESERVATIVE TREATMENT

1. ALL GLULAM MEMBERS TO BE FINISHED WITH POLYURETHANE FINISH PER SPECIFICATIONS.
2. ALL COLUMNS, BEAMS, FLY RAFTERS AND DECKING TO BE PRESERVATIVE TREATED.

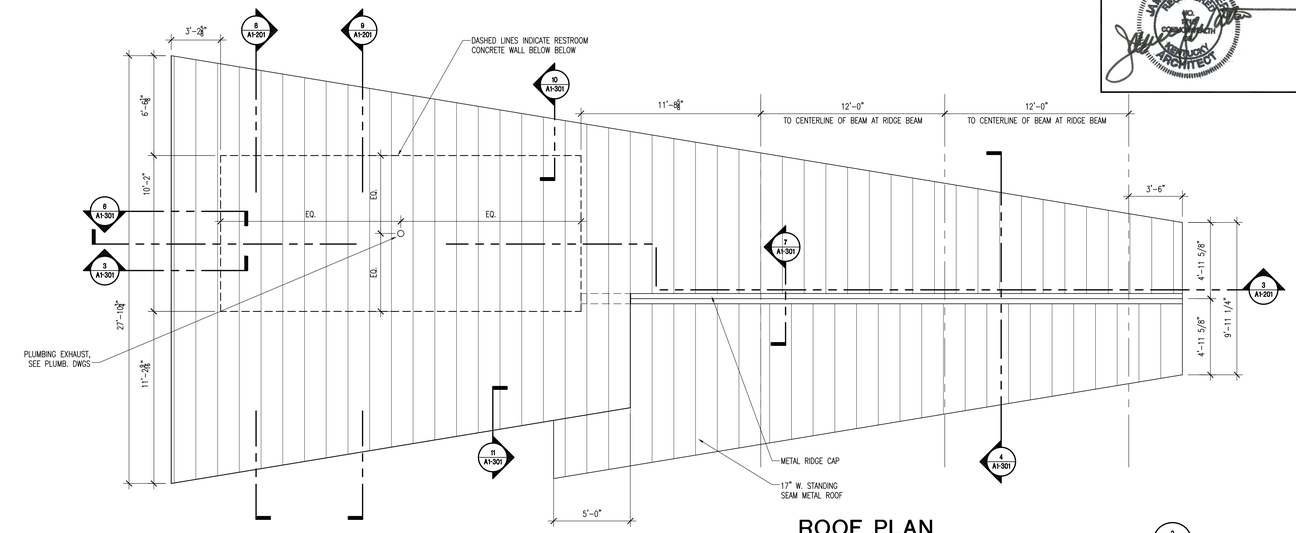

ROOF PLAN

SCALE: 1/4" = 1'-0"

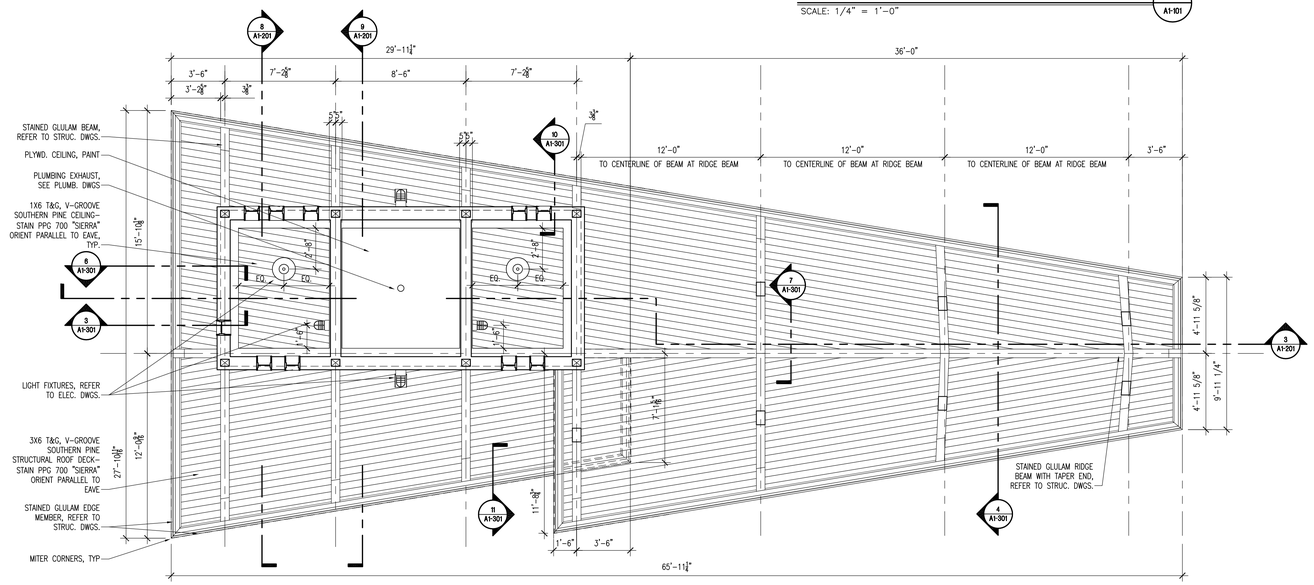

REFLECTED CEILING PLAN

SCALE: 1/4" = 1'-0"

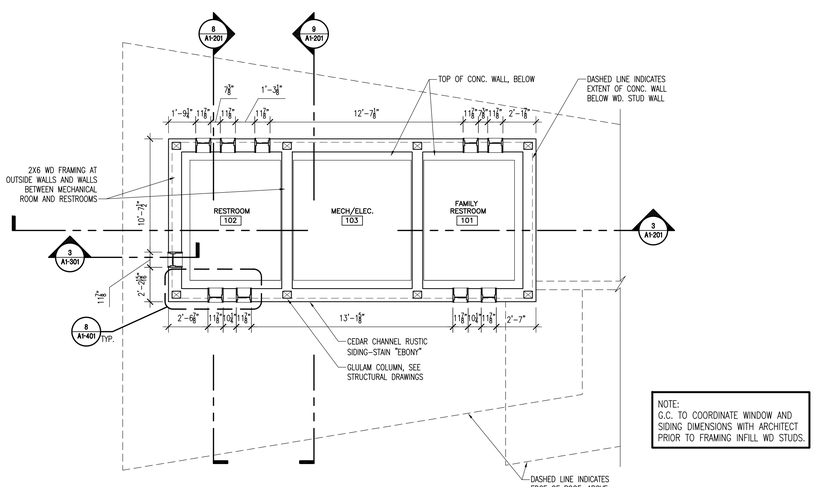

NOTE:
G.C. TO COORDINATE WINDOW AND SIDING DIMENSIONS WITH ARCHITECT PRIOR TO FRAMING INFILL WD STUDS.

PLAN ABOVE CONC. WALLS

SCALE: 1/4" = 1'-0"

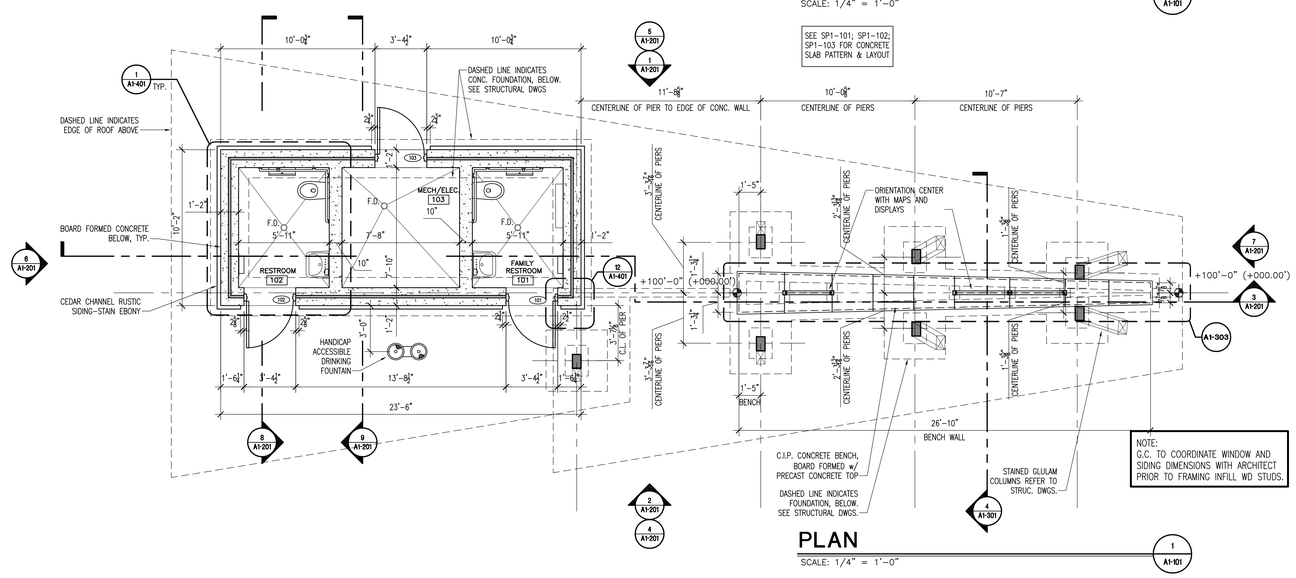

NOTE:
G.C. TO COORDINATE WINDOW AND SIDING DIMENSIONS WITH ARCHITECT PRIOR TO FRAMING INFILL WD STUDS.

PLAN

SCALE: 1/4" = 1'-0"

Architecture
Engineering
Planning

815 West Market Street, Suite 300, Louisville, Kentucky 40202
Phone: 502-585-2222 Facsimile: 502-992-0005 Internet: www.qk4.com
Kentucky · Indiana · Georgia · West Virginia · Tennessee · Florida

LANDSCAPE ARCHITECT
Wallace Roberts & Todd, LLC
1700 Market Street
28th Floor
Philadelphia, PA 19103
tel 215.732.5215
fax 215.732.2551

Architect
BRAVURA
111 West Washington Street
Louisville, Kentucky 40202
T: (502) 584-0929
F: (502) 584-0929

The Parklands of Floyds Fork, Project 4A

The Strand, Turkey Run Park and Broad Run Park
Louisville, Kentucky

Owner:
21st Century Parks, Inc.
371 W. Main St., Suite 202
Louisville, Kentucky 40202

REV #	DATE	DESCRIPTION
	06/06/2013	ISSUED FOR BID
1	05/23/2013	ADDENDUM #1: REVISED TITLE TO READ: "ADD-ALT. NO.2"

Job No:	155-617
Date:	May 23, 2013
Scale:	As Shown
Drawn By:	

ISSUED FOR ADDENDUM #1

Drawing Title:
Parklands of Floyds Fork
ADD-ALT. NO.2
PROJECT 4A
The Strand
2-Hole Trailhead
Plans

Drawing No:
A1-101

May 21, 2013 - 4:46pm
Z:\Drawings\KY155-Floyds Fork\KY155-617 Project 4\Structures\2-Hole Restrooms\A1-101.dwg (A1-101)

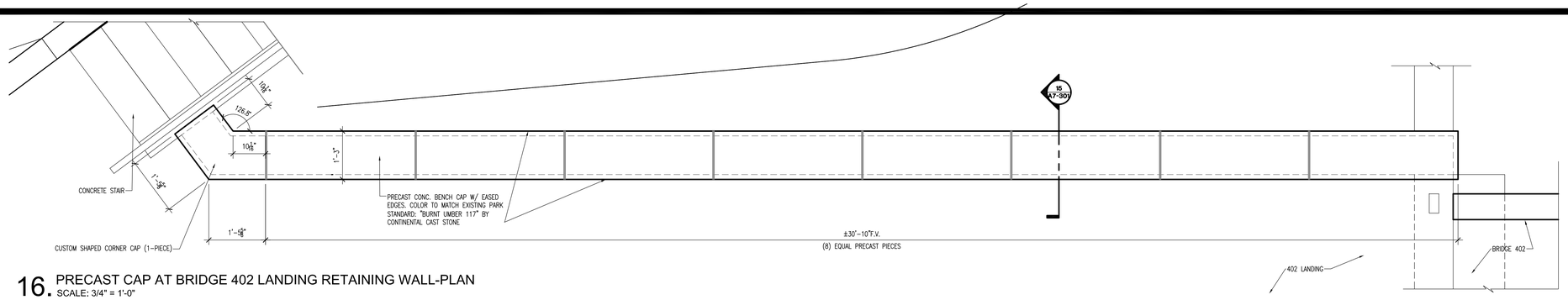

16. PRECAST CAP AT BRIDGE 402 LANDING RETAINING WALL-PLAN
SCALE: 3/4" = 1'-0"

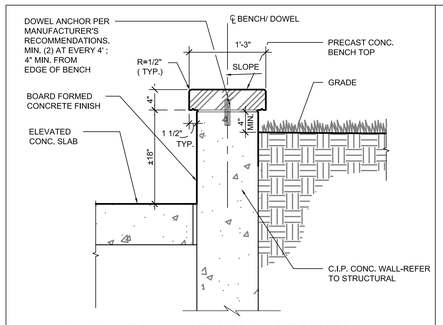

15. CONCRETE SEAT WALL - SECTION
SCALE: 1" = 1'-0"

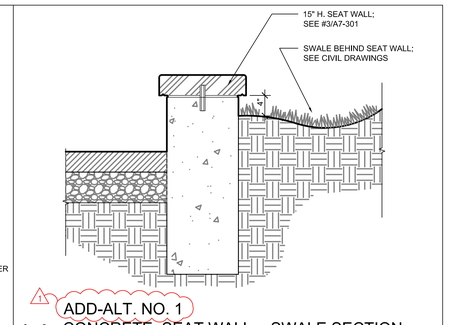

ADD-ALT. NO. 1

14. CONCRETE SEAT WALL - SWALE SECTION
SCALE: 1" = 1'-0"

NOTE: SIGN SHALL BE INSTALLED BY OWNER BEFORE PRECAST CAP IS PLACED PENDING FIELD DIRECTION BY ARCHITECT.

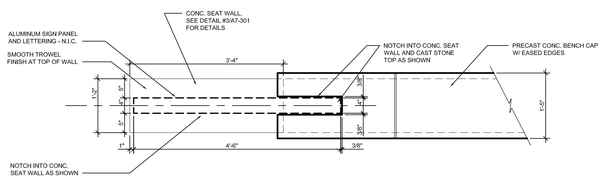

13. TRAILHEAD SIGNAGE AT SEAT WALL - PLAN
SCALE: 3/4" = 1'-0"

NOTE: SIGN SHALL BE INSTALLED BY OWNER BEFORE PRECAST CAP IS PLACED PENDING FIELD DIRECTION BY ARCHITECT.

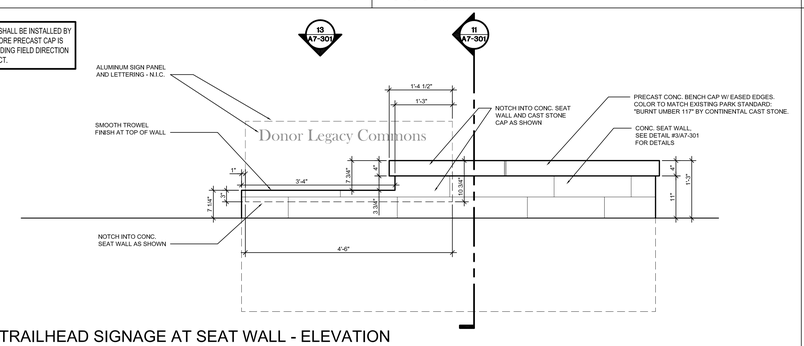

Donor Legacy Commons

12. TRAILHEAD SIGNAGE AT SEAT WALL - ELEVATION
SCALE: 3/4" = 1'-0"

NOTE: SIGN SHALL BE INSTALLED BY OWNER BEFORE PRECAST CAP IS PLACED PENDING FIELD DIRECTION BY ARCHITECT.

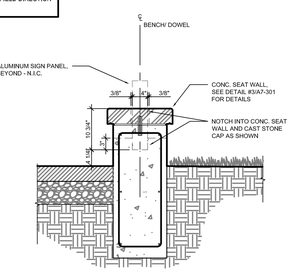

11. TRAILHEAD SIGNAGE AT SEAT WALL - SECTION
SCALE: 3/4" = 1'-0"

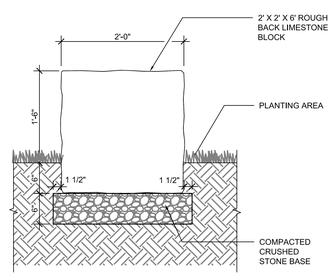

10. LIMESTONE BENCH (SEATING BLOCK) AT PLANTING AREA - SECTION
SCALE: 1" = 1'-0"

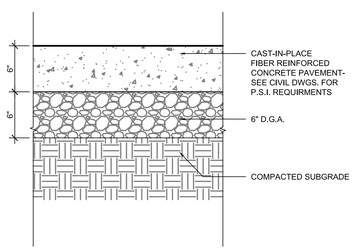

9. PEDESTRIAN C.I.P. CONC. PAVING - SECTION
SCALE: 1 1/2" = 1'-0"

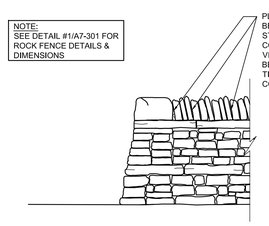

8. PLANTATION ERA ROCK FENCE - ELEVATION
SCALE: 1/2" = 1'-0"

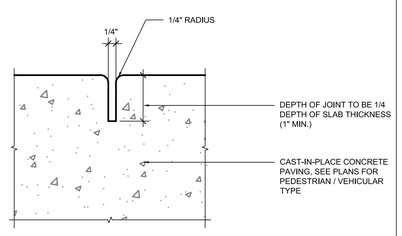

7. TYP. CONTROL JOINT - SECTION
SCALE: 6" = 1'-0"

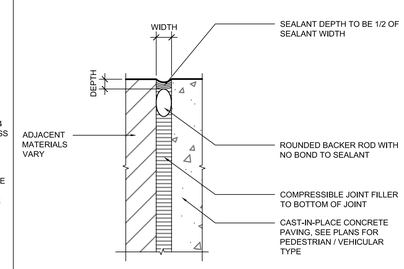

6. TYP. EXPANSION JOINT - SECTION
SCALE: 6" = 1'-0"

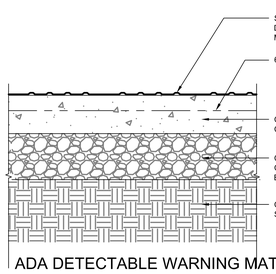

5. ADA DETECTABLE WARNING MATERIAL PAVERS - SECTION
SCALE: 1" = 1'-0"

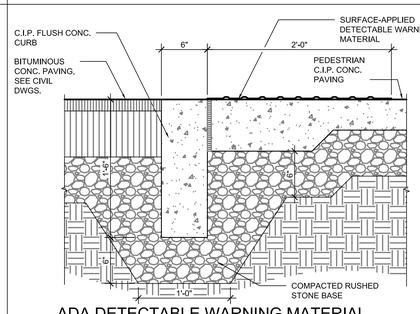

4. ADA DETECTABLE WARNING MATERIAL AT BITUMINOUS CON. PAVING - SECTION
SCALE: 1 1/2" = 1'-0"

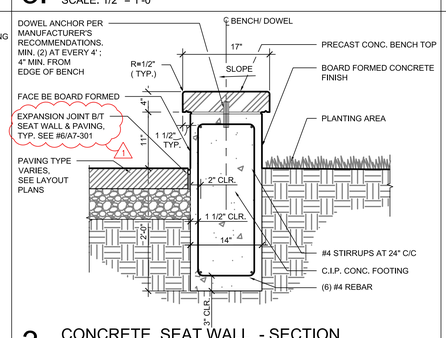

3. CONCRETE SEAT WALL - SECTION
SCALE: 1" = 1'-0"

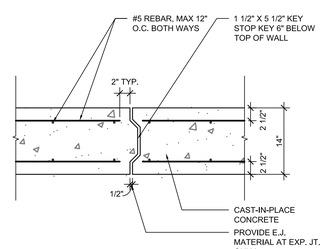

2. CONTROL JOINT AND EXPANSION JOINT AT CONCRETE WALLS - PLAN
SCALE: 1" = 1'-0"

NOTE: SEE ELEVATION #8/A7-301 FOR INFORMATION ON MORTAR BETWEEN TOP COPING STONES

NOTE: WHEN ROCK FENCE ABUTS CONCRETE SLAB, WALL IS BUILT AFTER SLAB IS POURED, TYP.

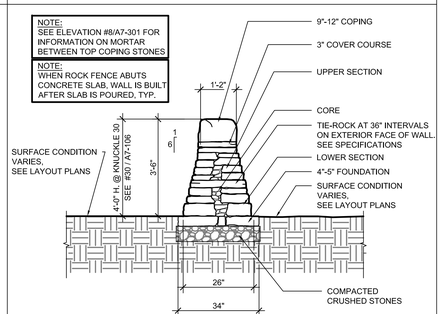

1. PLANTATION ERA ROCK FENCE - SECTION
SCALE: 1/2" = 1'-0"

Architecture Engineering Planning
815 West Market Street, Suite 300, Louisville, Kentucky 40202
Phone: 502-585-2222 Facsimile: 502-992-0605 Internet: www.qk4.com
Kentucky · Indiana · Georgia · West Virginia · Tennessee · Florida

LANDSCAPE ARCHITECT
Wallace Roberts & Todd, LLC
1700 Market Street
28th Floor
Philadelphia, PA 19103
tel 215.732.5215
fax 215.732.2551

Architect
BRAVURA
111 West Washington Street
Louisville, Kentucky 40202
P: (502) 584-0090
F: (502) 584-0829

The Parklands of Floyds Fork, Project 4A

The Strand, Turkey Run Park and Broad Run Park
Louisville, Kentucky

Owner:
21st Century Parks, Inc.
371 W. Main St., Suite 202
Louisville, Kentucky 40202

REV #	DATE	DESCRIPTION
	06/06/2013	ISSUED FOR BID
1	05/23/2013	ASD #1-(1) DETAIL #11-SEAT WALL INCLUDED IN ADD-ALT. NO.1
		(2) ADDED EXP. JOINT AT SEAT WALL-DETAIL #3

Job No:	155-617
Date:	May 23, 2013
Scale:	AS SHOWN
Drawn By:	

ISSUED FOR ADDENDUM #1

Drawing Title:
Parklands of Floyds Fork
PROJECT 4A
Knuckles Details

Drawing No:
A7-301

May 21, 2013 - 5:15pm
Z:\Drawings\K155-Floyds Fork\K155-617 Project 4\Knuckles\A7-301 - Details.dwg (A7-301)

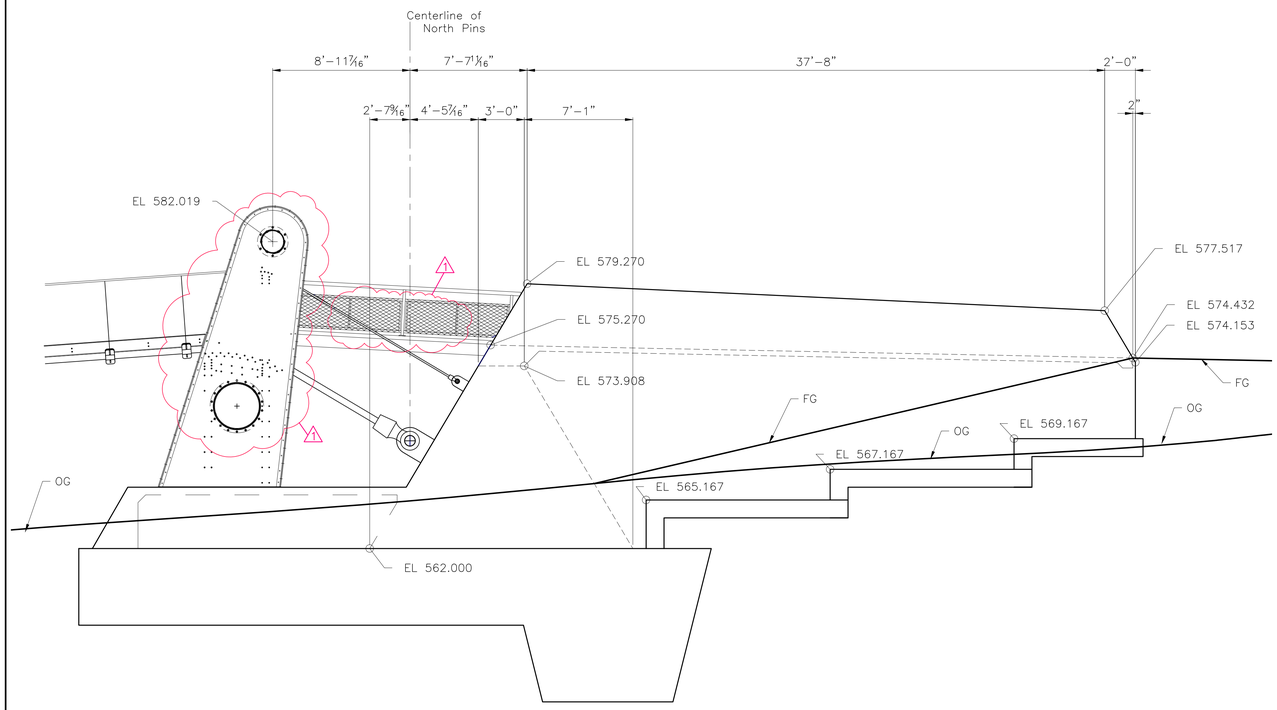

NORTH ANCHORAGE EAST ELEVATION

SCALE: 1/4"=1'-0"

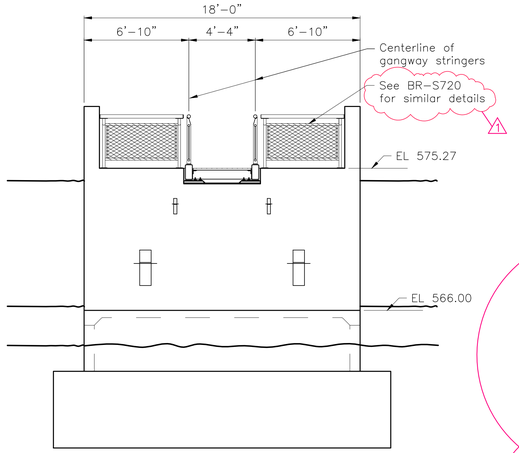

NORTH ANCHORAGE SOUTH ELEVATION

SCALE: 1/4"=1'-0"

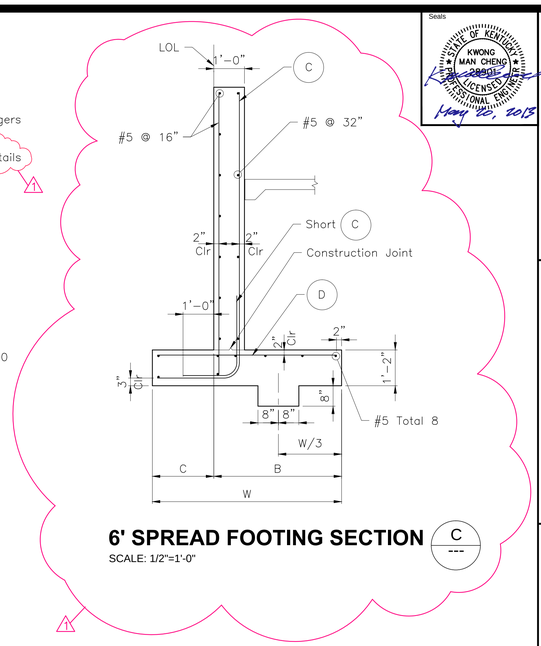

6' SPREAD FOOTING SECTION C

SCALE: 1/2"=1'-0"

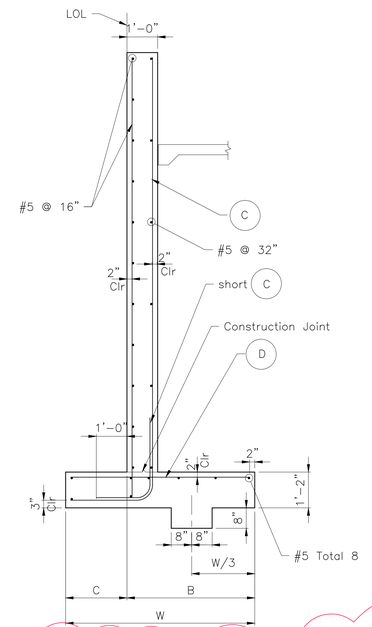

10' SPREAD FOOTING SECTION A

SCALE: 1/2"=1'-0"

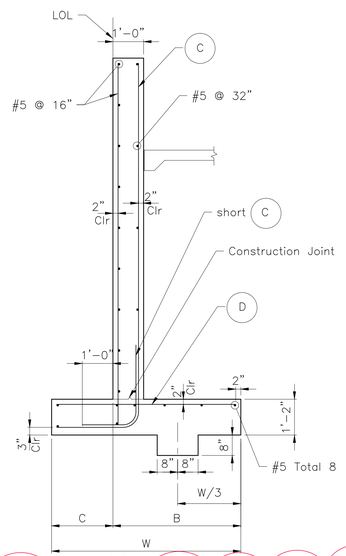

8' SPREAD FOOTING SECTION B

SCALE: 1/2"=1'-0"

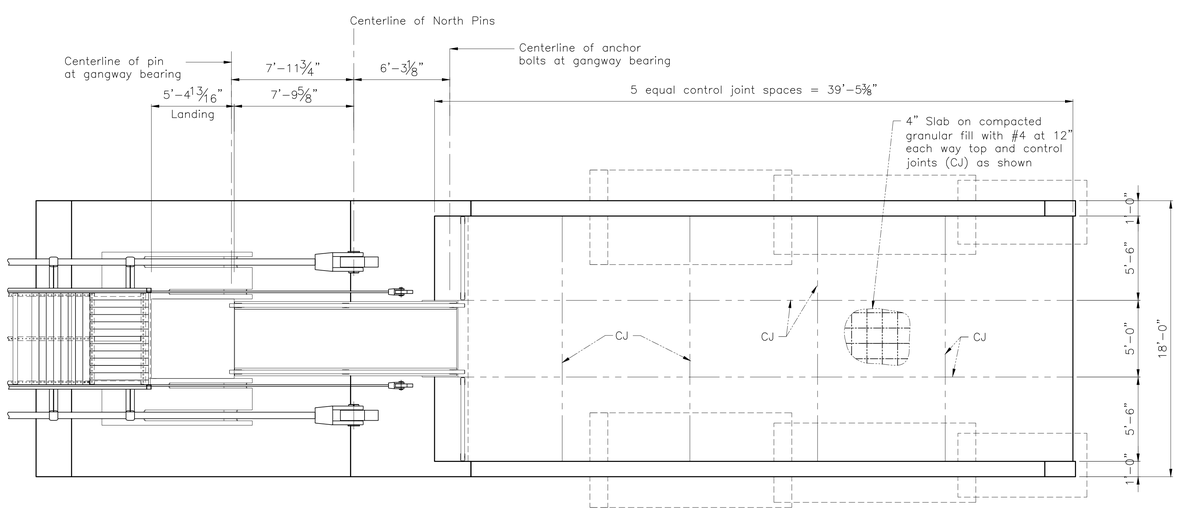

NORTH ANCHORAGE PLAN

SCALE: 1/4"=1'-0"

TABLE OF REINFORCING STEEL DIMENSIONS AND DATA			
Design H	6'	8'	10'
W	4'-2"	5'-2"	6'-2"
C	1'-4"	1'-8"	2'-0"
B	2'-10"	3'-6"	4'-2"
(c) bars	# 5 @ 16	# 5 @ 8	# 6 @ 8
(d) bars	# 5 @ 16	# 5 @ 16	# 5 @ 8
Total (e) bars	6 - #6	6 - #6	6 - #8
Total (f) bars	6 - #6	6 - #6	6 - #8

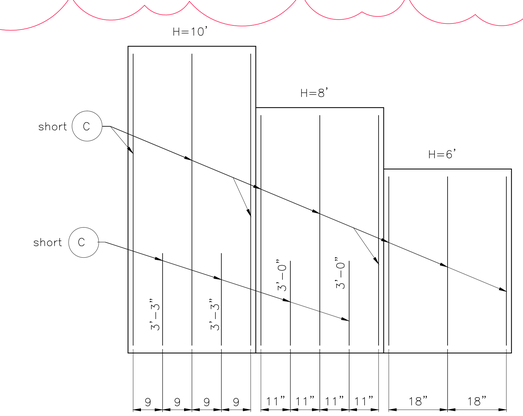

ELEVATION

SCALE: 1/2"=1'-0"

Seals

STATE OF KENTUCKY
KWONG MAN CHENG
28901
LICENSED PROFESSIONAL ENGINEER
May 23, 2013

OPAC Consulting Engineers
315 Bay Street, Second Floor
San Francisco, CA 94945
(415)989-4551
www.opacengineers.com

LANDSCAPE ARCHITECT
Wallace Roberts & Todd, LLC
1700 Market Street
28th Floor
Philadelphia, PA 19103
tel 215.732.5215
fax 215.732.2551

Architect
BRAVURA
111 West Washington Street
Louisville, Kentucky 40202
T: (502) 584-6000
F: (502) 584-6829

The Parklands of Floyds Fork, Project 4A

The Strand, Turkey Run Park and Broad Run
Louisville, Kentucky

Owner:
21st Century Parks, Inc.
371 W. Main St., Suite 202
Louisville, Kentucky 40202

REV #	DATE	DESCRIPTION
	05/08/2013	ISSUED FOR BID
1	06/23/2013	ADDENDUM #1: CORRECTIONS AND REVISED HANDRAIL

Job No:	12300.4AC
Date:	May 23, 2013
Scale:	As Noted
Drawn By:	L.Chien

ISSUED FOR ADDENDUM #1

Drawing Title:

Parklands of Floyds Fork
ADD-ALT. NO.1
PROJECT 4A
North Walls and Gangplank-1

Drawing No:

BR-S719

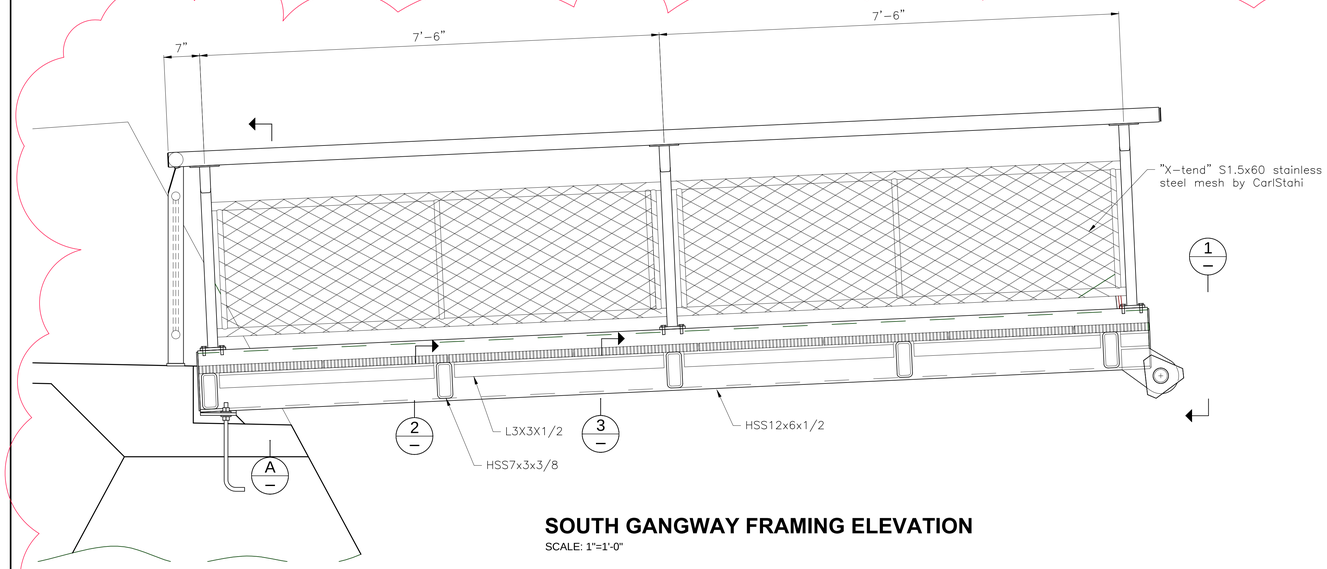

SOUTH GANGWAY FRAMING ELEVATION

SCALE: 1"=1'-0"

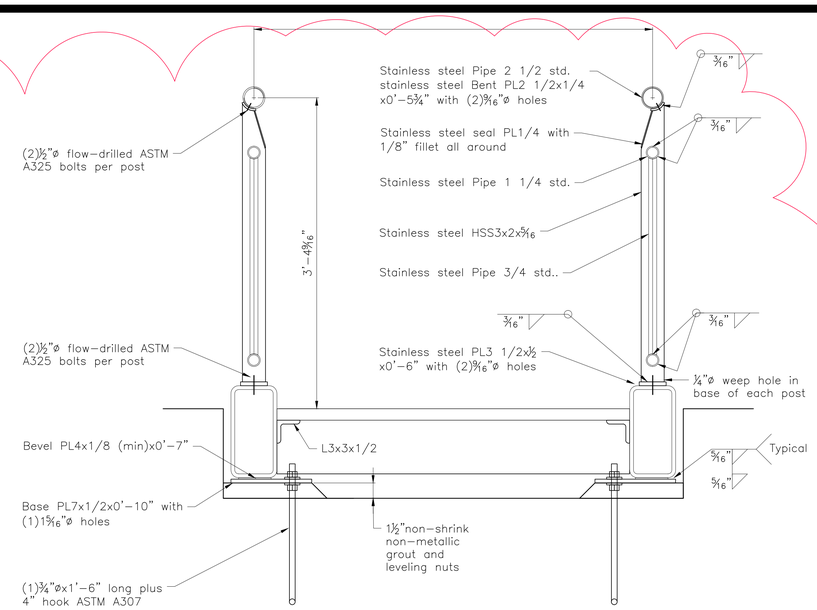

SOUTH GANGWAY SECTION

A

SCALE: 1 1/2"=1'-0"

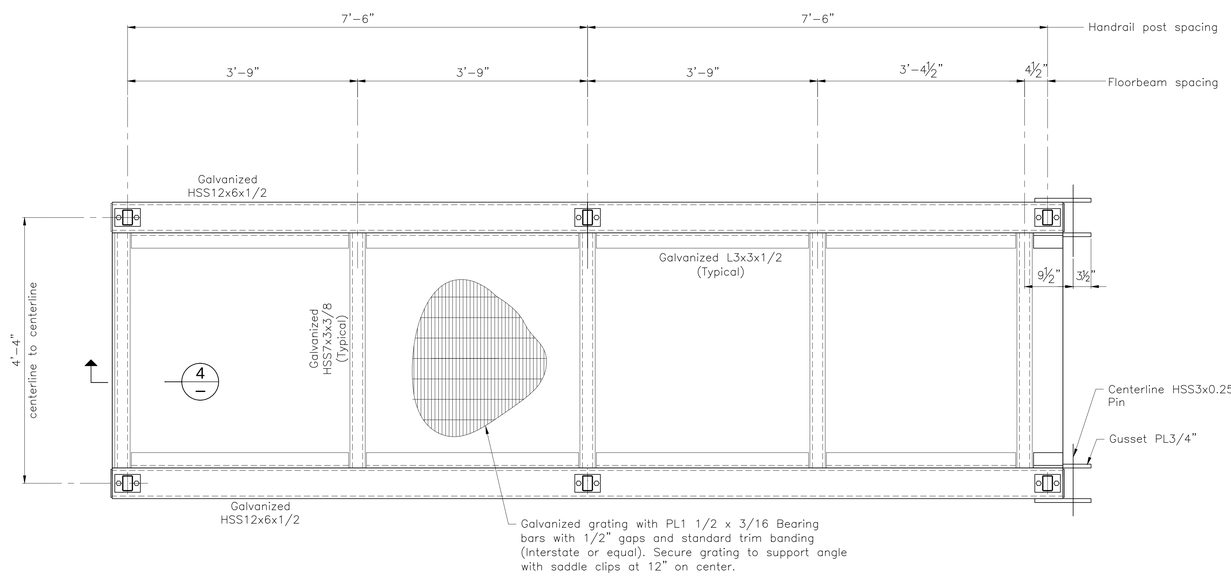

SOUTH GANGWAY FRAMING PLAN

SCALE: 1"=1'-0"

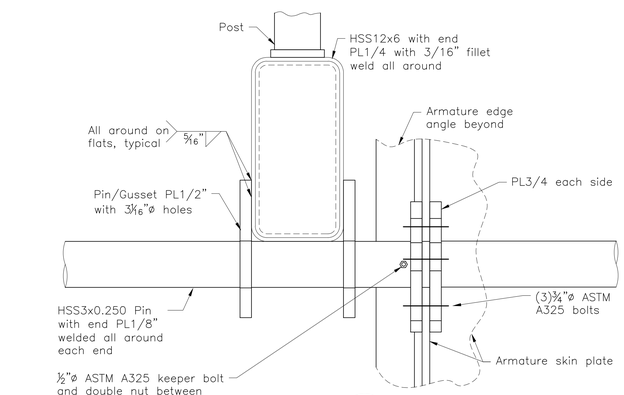

DETAIL 1

SCALE: 3"=1'-0"

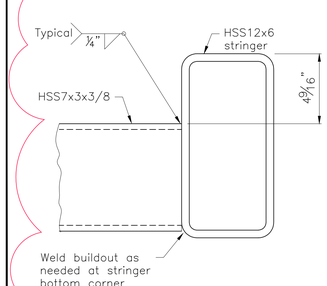

DETAIL 2

SCALE: 3"=1'-0"

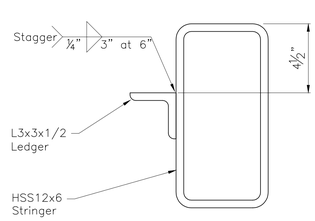

DETAIL 3

SCALE: 3"=1'-0"

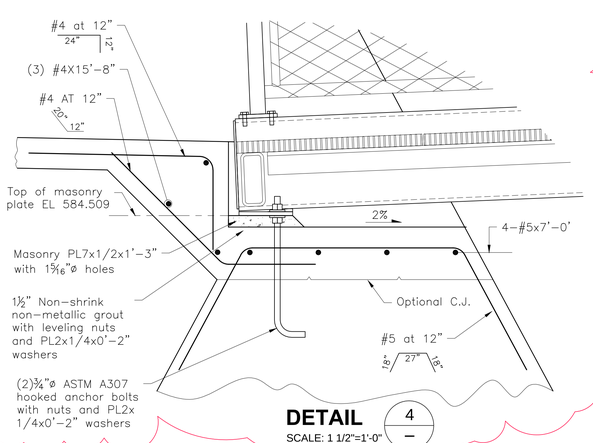

DETAIL 4

SCALE: 1 1/2"=1'-0"

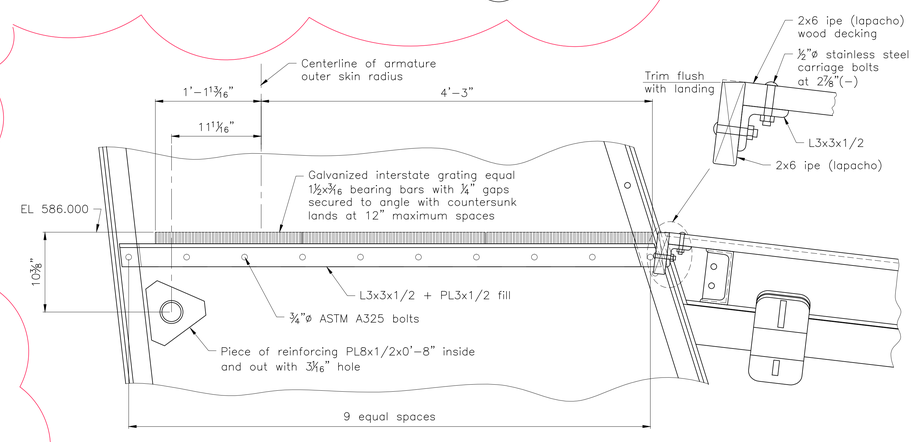

SOUTH ARMATURE LANDING SECTION

SCALE: 1 1/2"=1'-0"

NOTE:

For details not shown, use similar details from BR-S720.

Seals

STATE OF KENTUCKY KWONG MAN CHENG 28901 LICENSED PROFESSIONAL ENGINEER

May 22, 2013

OPAC Consulting Engineers
315 Bay Street, Second Floor
San Francisco, CA 94945
(415)989-4551
www.opacengineers.com

LANDSCAPE ARCHITECT
Wallace Roberts & Todd, LLC
1700 Market Street
28th Floor
Philadelphia, PA 19103
tel 215.732.5215
fax 215.732.2551

Architect
BRAVURA
111 West Washington Street
Louisville, Kentucky 40202
T: (502) 584-0000
F: (502) 584-0829

The Parklands of Floyds Fork, Project 4A

The Strand, Turkey Run Park and Broad Run
Louisville, Kentucky

Owner:
21st Century Parks, Inc.
371 W. Main St., Suite 202
Louisville, Kentucky 40202

REV #	DATE	DESCRIPTION
	05/08/2013	ISSUED FOR BID
1	05/23/2013	ADDENDUM #1: CORRECTIONS AND REVISED HANDRAIL

Job No:	12300.4AC
Date:	May 23, 2013
Scale:	As Noted
Drawn By:	L.Chien

ISSUED FOR ADDENDUM #1

Drawing Title:

Parklands of Floyds Fork

1 ADD-ALT. NO.1 PROJECT 4A South Walls and Gangplank - 2

Drawing No:

BR-S718

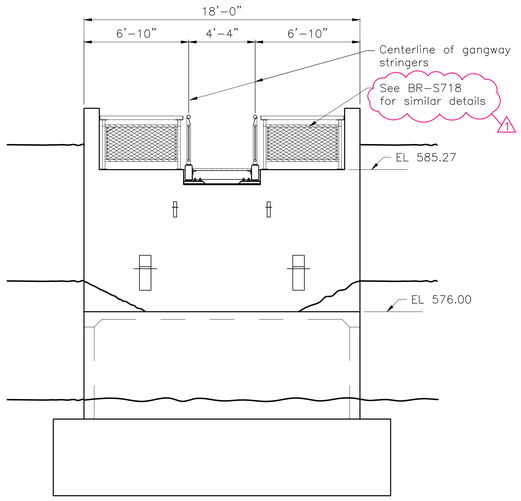

SOUTH ANCHORAGE NORTH ELEVATION

SCALE: 1/4"=1'-0"

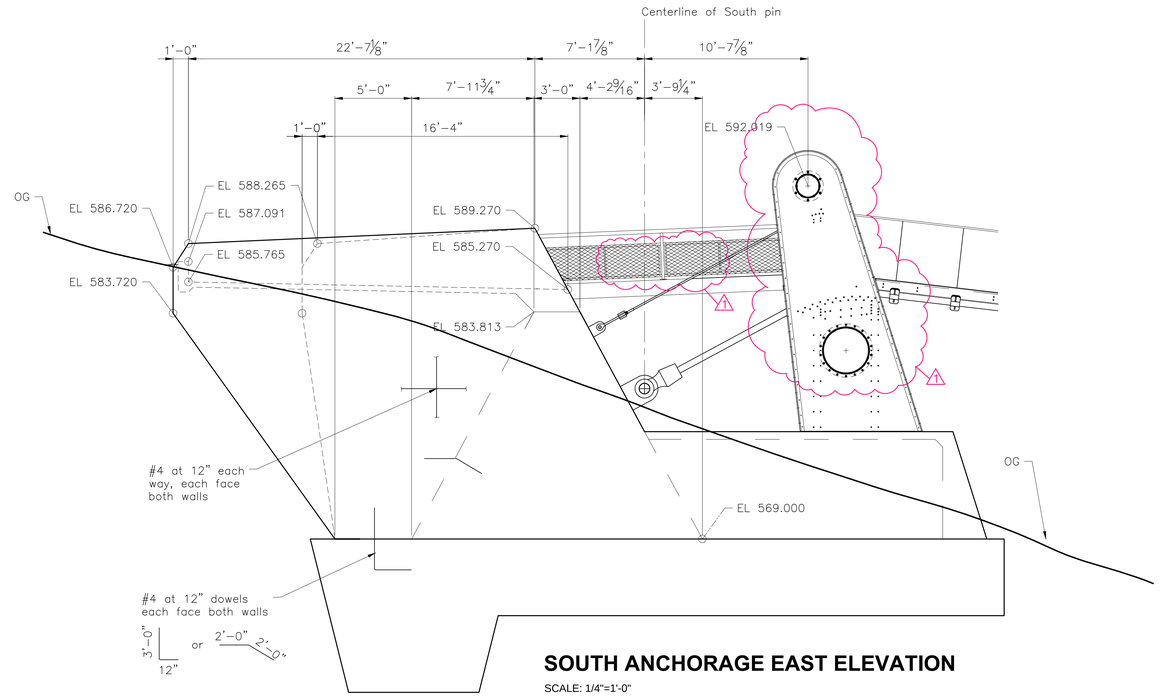

SOUTH ANCHORAGE EAST ELEVATION

SCALE: 1/4"=1'-0"

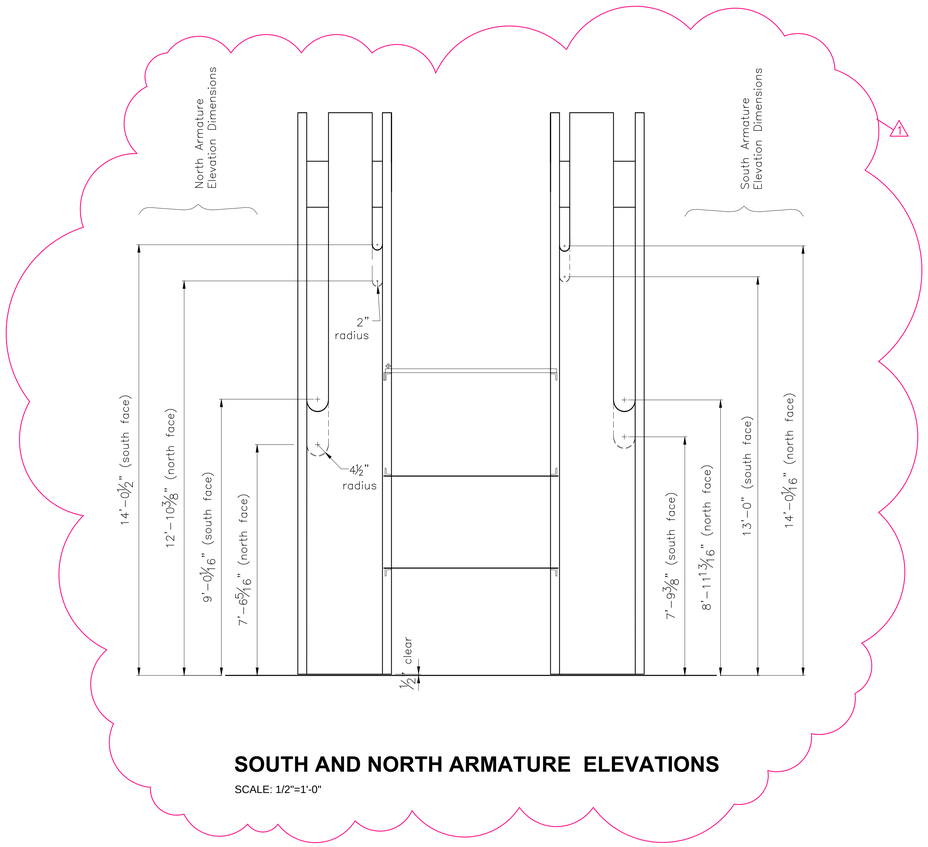

SOUTH AND NORTH ARMATURE ELEVATIONS

SCALE: 1/2"=1'-0"

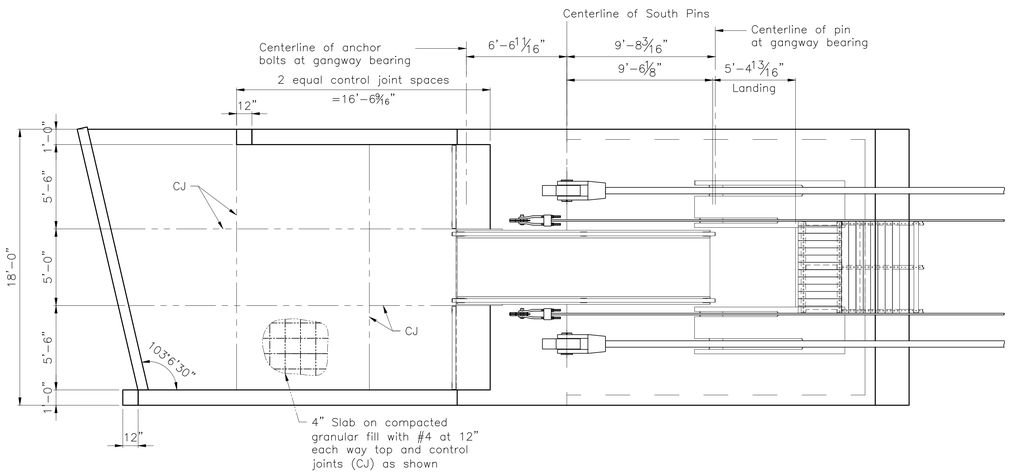

SOUTH ANCHORAGE PLAN

SCALE: 1/4"=1'-0"

Seals

STATE OF KENTUCKY
KWONG MAN CHENG
28904
LICENSED PROFESSIONAL ENGINEER

May 22, 2013

OPAC Consulting Engineers
315 Bay Street, Second Floor
San Francisco, CA 94945
(415)989-4551
www.opacengineers.com

LANDSCAPE ARCHITECT
Wallace Roberts & Todd, LLC
1700 Market Street
28th Floor
Philadelphia, PA 19103
tel 215.732.5215
fax 215.732.2551

Architect
BRAVURA
111 West Washington Street
Louisville, Kentucky 40202
T: (502) 584-0000
F: (502) 584-0829

The Parklands of Floyds Fork, Project 4A

The Strand, Turkey Run Park and Broad Run
Louisville, Kentucky

Owner:
21st Century Parks, Inc.
371 W. Main St., Suite 202
Louisville, Kentucky 40202

REV #	DATE	DESCRIPTION
	05/08/2013	ISSUED FOR BID
1	05/23/2013	ADDENDUM #1: CORRECTIONS AND REVISED HANDRAIL

Job No:	12300.4AC
Date:	May 28, 2013
Scale:	As Noted
Drawn By:	L.Chien

ISSUED FOR ADDENDUM #1

Drawing Title:

Parklands of Floyds Fork

1 ADD-ALT. NO.1 PROJECT 4A South Walls and Gangplank - 1

Drawing No:

BR-S717

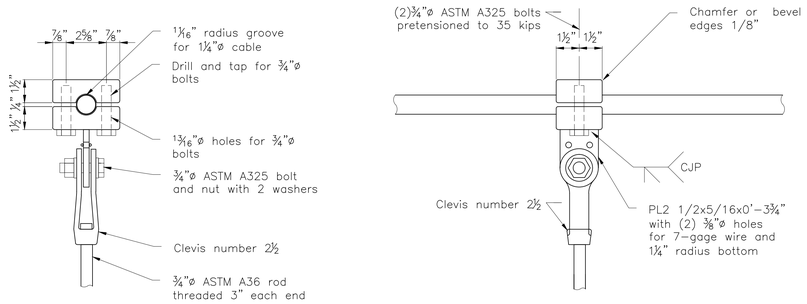

HANDRAIL CLAMP DETAILS

SCALE: 3"=1'-0"

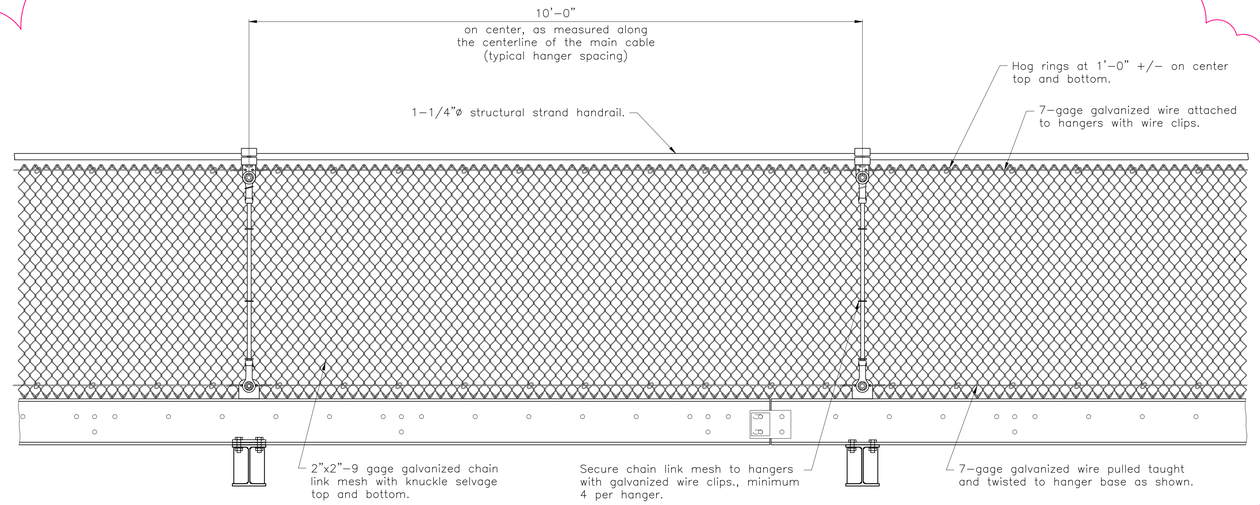

HANDRAIL ELEVATION

SCALE: 1"=1'-0"

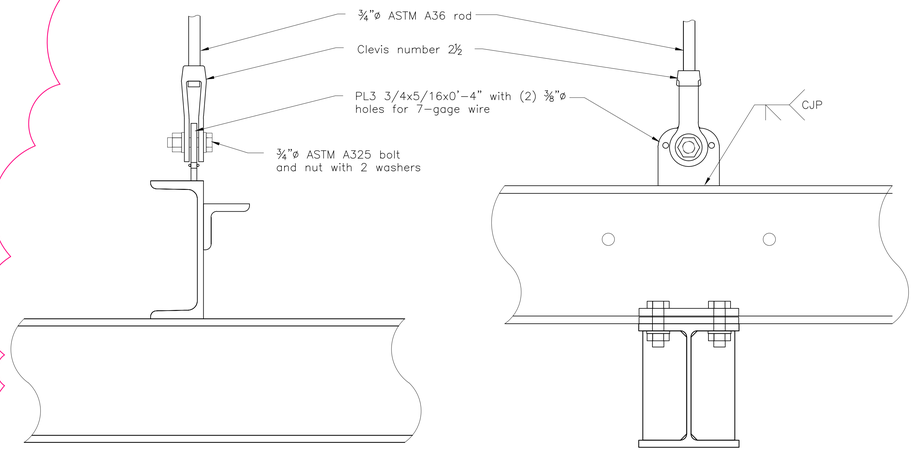

HANDRAIL TO STRINGER CONNECTION DETAILS

SCALE: 3"=1'-0"

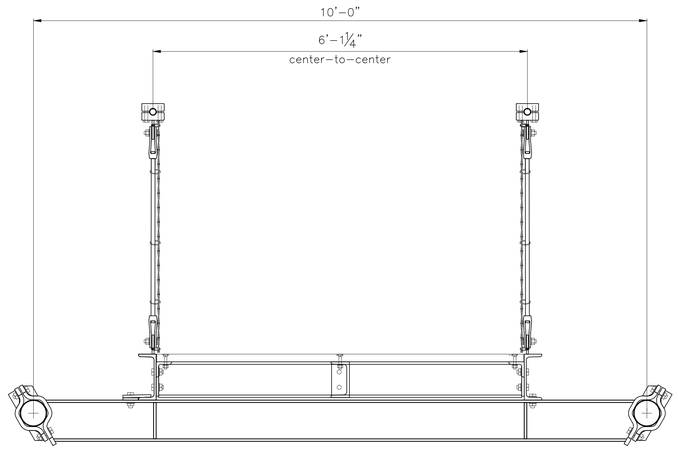

HANDRAIL SECTION

SCALE: 1"=1'-0"

Seals

STATE OF KENTUCKY
KWONG MAN CHENG
28901
LICENSED
PROFESSIONAL ENGINEER
May 20, 2013

OPAC Consulting Engineers
315 Bay Street, Second Floor
San Francisco, CA 94945
(415)989-4551
www.opacengineers.com

LANDSCAPE ARCHITECT
WRT
Wallace Roberts & Todd, LLC
1700 Market Street
28th Floor
Philadelphia, PA 19103
tel 215.732.5215
fax 215.732.2551

Architect
BRAVURA
111 West Washington Street
Louisville, Kentucky 40202
T: (502) 584-9900
F: (502) 584-0829

The Parklands of Floyds Fork, Project 4A
The Strand, Turkey Run Park and Broad Run
Louisville, Kentucky

Owner:
21st Century Parks, Inc.
371 W. Main St., Suite 202
Louisville, Kentucky 40202

REV #	DATE	DESCRIPTION
	05/08/2013	ISSUED FOR BID
1	05/23/2013	ADDENDUM #1: CORRECTIONS AND REVISED HANDRAIL

Job No:	12300.4AC
Date:	May 23, 2013
Scale:	As Noted
Drawn By:	L.Chien

ISSUED FOR ADDENDUM #1

Drawing Title:
Parklands of Floyds Fork
ADD-ALT. NO.1
PROJECT 4A
Handrail Cable and Details

Drawing No:
BR-S716

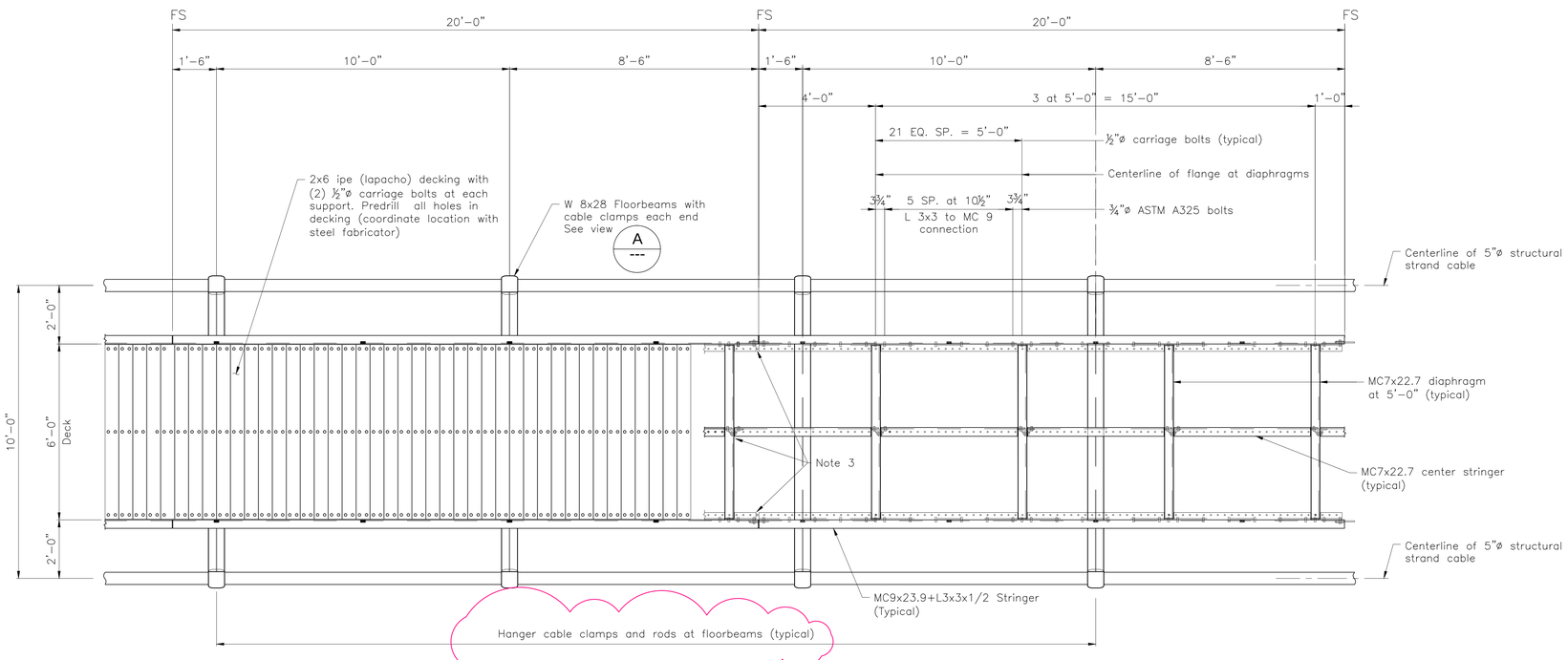

DEVELOPED PLAN - TYPICAL FRAMING SEGMENT

SCALE: 1/2"=1'-0"

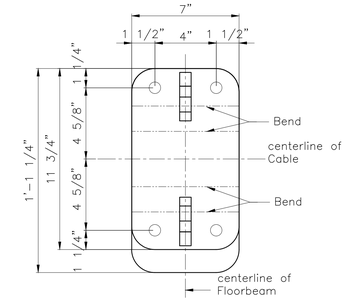

CABLE CLAMP DETAIL VIEW A

SCALE: 3"=1'-0"

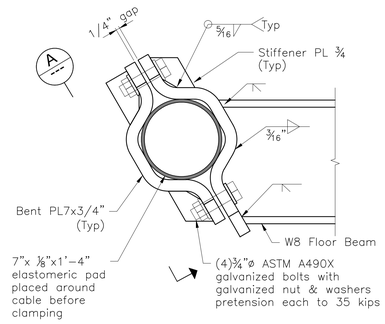

CABLE CLAMP SECTION B

SCALE: 3"=1'-0"

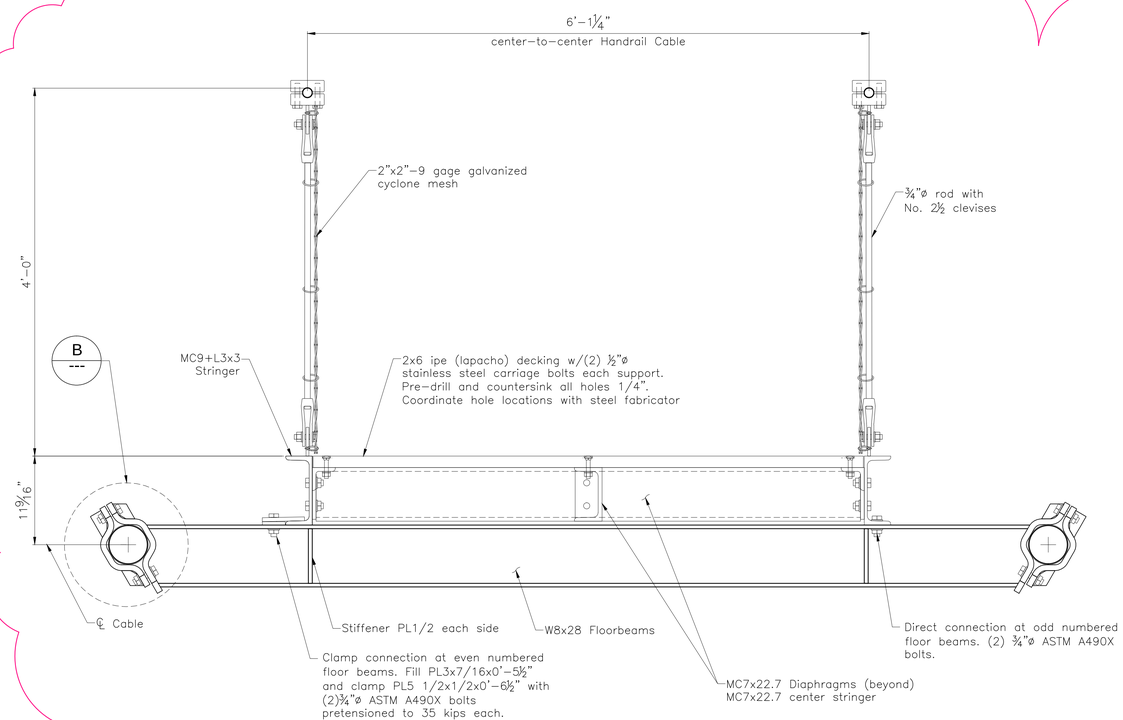

BRIDGE DECK TYPICAL SECTION 1/3

SCALE: 1 1/2"=1'-0"

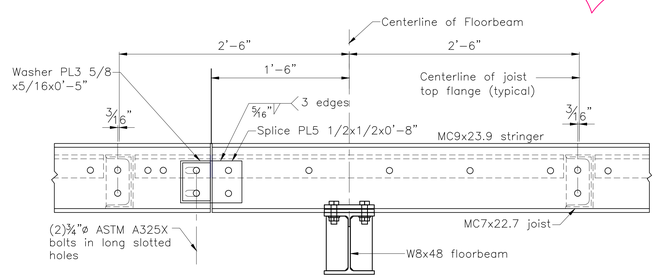

STRINGER SPLICE DETAIL

SCALE: 1 1/2"=1'-0"

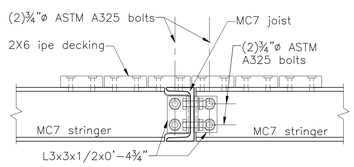

JOIST - INTERIOR STRINGER CONNECTION DETAIL

SCALE: 1 1/2"=1'-0"

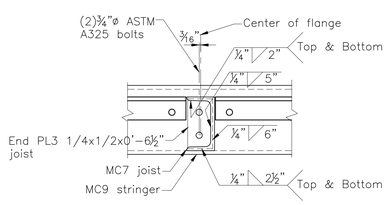

JOIST - STRINGER CONNECTION DETAIL

SCALE: 1 1/2"=1'-0"

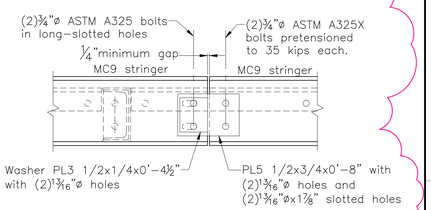

STRINGER - STRINGER EXPANSION DETAIL

SCALE: 3"=1'-0"

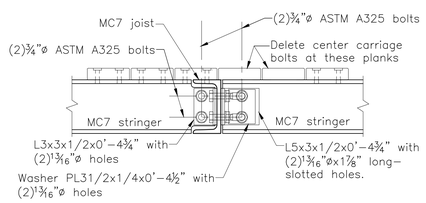

JOIST - INTERIOR STRINGER EXPANSION DETAIL

SCALE: 1 1/2"=1'-0"

NOTES:

1. All dimensions measured along cable centerline.
2. Handrail cable not shown for clarity.
3. Omit carriage bolt these locations (typical).
4. Work this sheet with BR-S713 and BR-S714.
5. See BR-716 for Handrail details.

Seals

STATE OF KENTUCKY KWONG MAN CHENG 28901 LICENSED PROFESSIONAL ENGINEER

May 20, 2013

OPAC Consulting Engineers
315 Bay Street, Second Floor
San Francisco, CA 94945
(415)989-4551
www.opacengineers.com

LANDSCAPE ARCHITECT
Wallace Roberts & Todd, LLC
1700 Market Street
28th Floor
Philadelphia, PA 19103
tel 215.732.5215
fax 215.732.2551

Architect
BRAVURA
111 West Washington Street
Louisville, Kentucky 40202
P: (502) 584-0000
F: (502) 584-0829

The Parklands of Floyds Fork, Project 4A
The Strand, Turkey Run Park and Broad Run
Louisville, Kentucky

Owner:
21st Century Parks, Inc.
371 W. Main St., Suite 202
Louisville, Kentucky 40202

REV #	DATE	DESCRIPTION
	05/08/2013	ISSUED FOR BID
1	05/23/2013	ADDENDUM #1: CORRECTIONS AND REVISED HANDRAIL

Job No:	12300.4AC
Date:	May 23, 2013
Scale:	As Noted
Drawn By:	L.Chien

ISSUED FOR ADDENDUM #1

Drawing Title:

Floyds Fork
ADD-ALT. NO. 1
PROJECT 4A
Typical Framing Segment and Details

Drawing No:

BR-S715

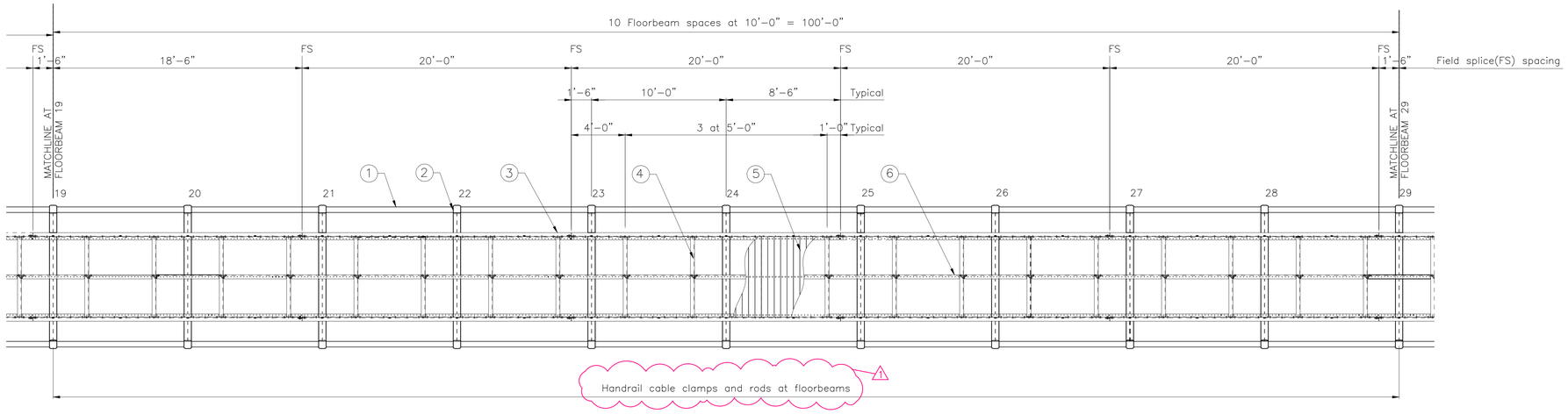

PARTIAL DEVELOPED FRAMING PLAN

SCALE: 1/4"=1'-0"

NORTH

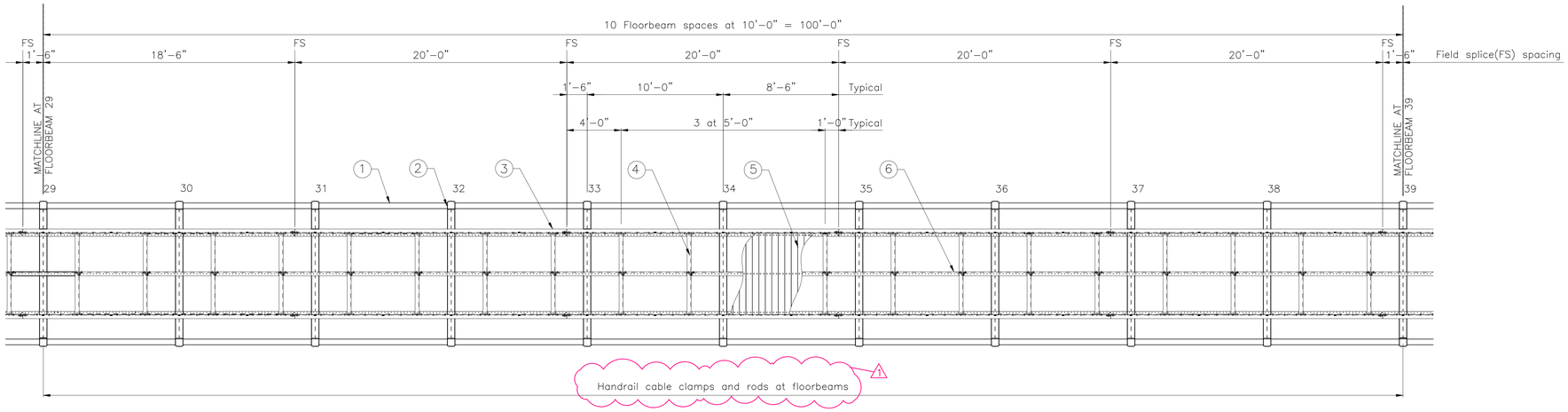

PARTIAL DEVELOPED FRAMING PLAN

SCALE: 1/4"=1'-0"

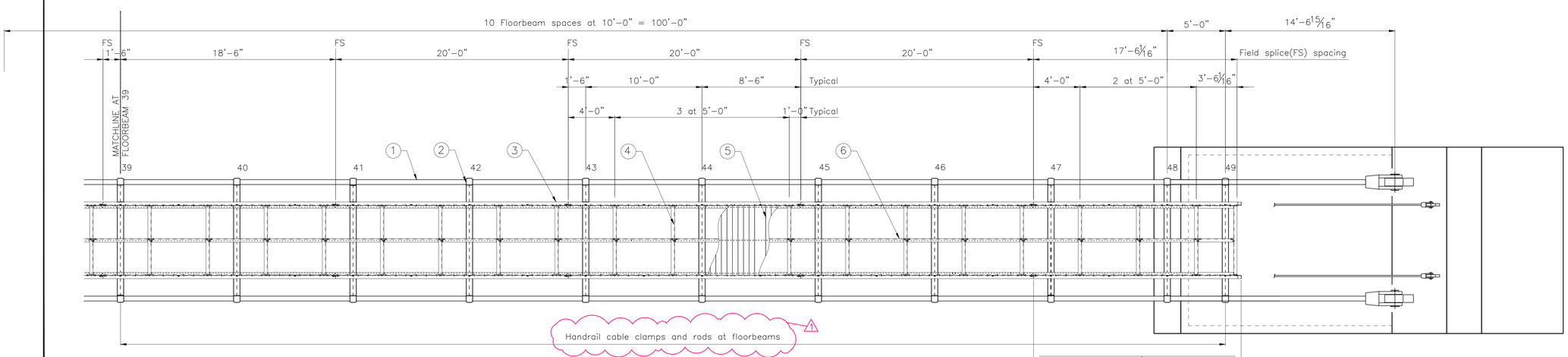

PARTIAL DEVELOPED FRAMING PLAN

SCALE: 1/4"=1'-0"

Erect floorbeam, stringers and diaphragms adjacent to armatures and landings after all other structural steel has been erected. Verify dimensions in field based on measurements taken at dawn before making the end cuts or drilling bolt holes for members adjacent to the landing.

NOTES:

1. 5"Ø structural strand cable.
2. W8x28 floorbeam with cable clamps.
3. MC9x23.7+L3x3x1/2 stringer.
4. MC7x22.7 diaphragms.
5. 2x6 ipe (Lapacho) decking.
6. MC7x22.7 center stringer.
7. All dimensions measured along centerline of cable.
8. Diaphragm dimensions are measured to center of flange.

Seals

STATE OF KENTUCKY
KWONG MAN CHENG
18906
LICENSED
PROFESSIONAL ENGINEER
May 22, 2013

OPAC Consulting Engineers
315 Bay Street, Second Floor
San Francisco, CA 94945
(415)989-4551
www.opacengineers.com

LANDSCAPE ARCHITECT
WRT
Wallace Roberts & Todd, LLC
1700 Market Street
28th Floor
Philadelphia, PA 19103
tel 215.732.5215
fax 215.732.2551

Architect
BRAVURA
111 West Washington Street
Louisville, Kentucky 40202
T: (502) 584-0000
F: (502) 584-0829

The Parklands of Floyds Fork, Project 4A

The Strand, Turkey Run Park and Broad Run
Louisville, Kentucky

Owner:
21st Century Parks, Inc.
371 W. Main St., Suite 202
Louisville, Kentucky 40202

REV #	DATE	DESCRIPTION
	05/08/2013	ISSUED FOR BID
1	05/23/2013	ADDENDUM #1: CORRECTIONS AND REVISED HANDRAIL

Job No:	12300.4AC
Date:	May 23, 2013
Scale:	As Noted
Drawn By:	L.Chien

ISSUED FOR ADDENDUM #1

Drawing Title:

Parklands of Floyds Fork

1 ADD-ALT. NO.1 PROJECT 4A Developed Framing Plan - 2

Drawing No:

BR-S714

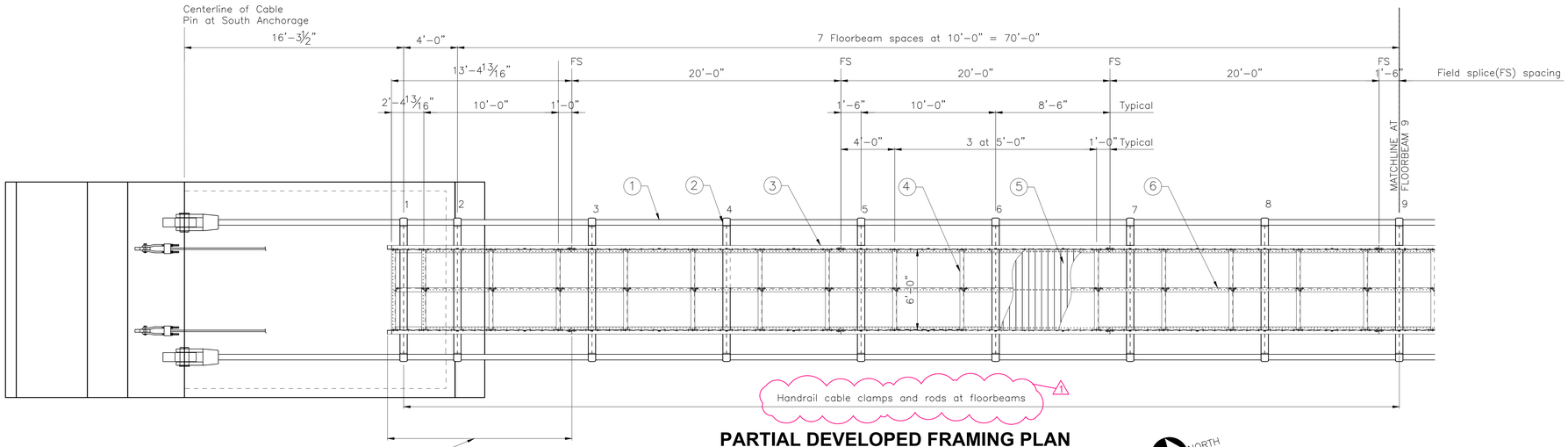

Erect floorbeam, stringers and diaphragms adjacent to armatures and landings after all other structural steel has been erected. Verify dimensions in field based on measurements taken at dawn before making the end cuts or drilling bolt holes for members adjacent to the landing.

PARTIAL DEVELOPED FRAMING PLAN

SCALE: 1/4"=1'-0"

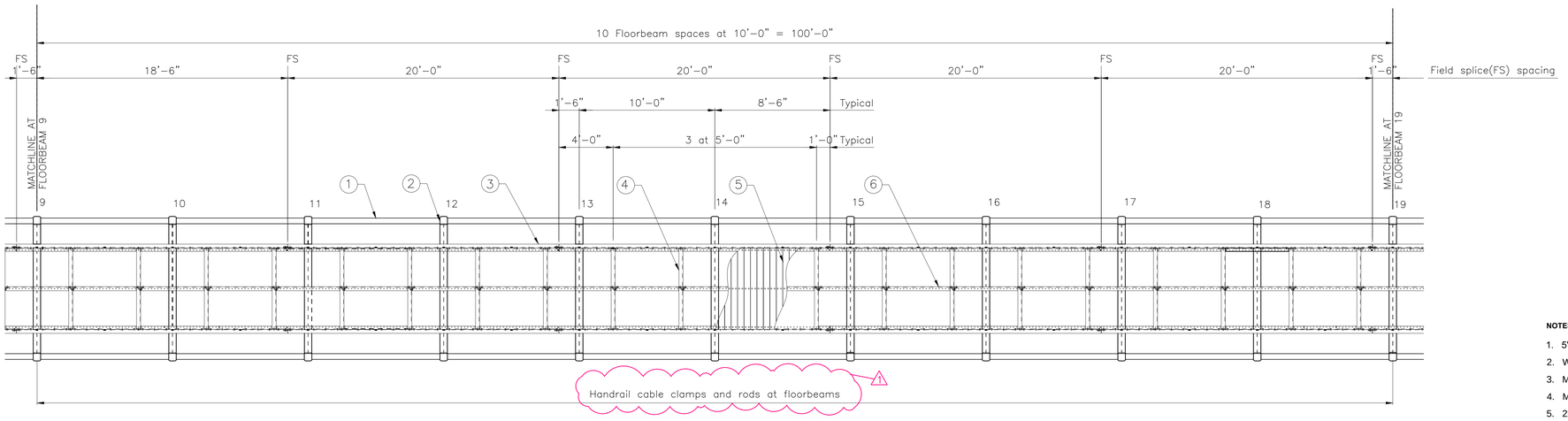

PARTIAL DEVELOPED FRAMING PLAN

SCALE: 1/4"=1'-0"

NOTES:

1. 5"Ø structural strand cable.
2. W8x28 floorbeam with cable clamps.
3. MC9x23.7+L3x3x1/2 stringer.
4. MC7x22.7 diaphragms.
5. 2x6 ipe (lapacho) decking.
6. MC7x22.7 center stringer.
7. All dimensions measured along centerline of cable.
8. Diaphragm dimensions are measured to center of flange.
9. Floorbeam spacing is given along the centerline of the cables.
10. Work this sheet with BR-S714.
11. See BR-S715 for framing details.

Seals

STATE OF KENTUCKY
KWONG MAN CHENG
28901
LICENSED
PROFESSIONAL ENGINEER
May 20, 2013

OPAC Consulting Engineers
315 Bay Street, Second Floor
San Francisco, CA 94945
(415)989-4551
www.opacengineers.com

LANDSCAPE ARCHITECT
WRT
Wallace Roberts & Todd, LLC
1700 Market Street
28th Floor
Philadelphia, PA 19103
tel 215.732.5215
fax 215.732.2551

Architect
BRAVURA
111 West Washington Street
Louisville, Kentucky 40202
T: (502) 584-9900
F: (502) 584-0829

The Parklands of Floyds Fork, Project 4A
The Strand, Turkey Run Park and Broad Run
Louisville, Kentucky

Owner:
21st Century Parks, Inc.
371 W. Main St., Suite 202
Louisville, Kentucky 40202

REV #	DATE	DESCRIPTION
	05/08/2013	ISSUED FOR BID
1	05/23/2013	ADDENDUM #1: CORRECTIONS AND REVISED HANDRAIL

Job No:	12300.4AC
Date:	May 23, 2013
Scale:	As Noted
Drawn By:	L.Chien

ISSUED FOR ADDENDUM #1

Drawing Title:
Parklands of Floyds Fork
ADD-ALT. NO.1
PROJECT 4A
Developed Framing Plan - 1

Drawing No:
BR-S713

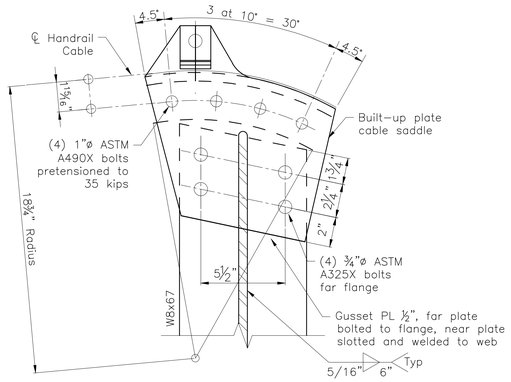

HANDRAIL SADDLE CONNECTION DETAIL (1/8)

SCALE: 3"=1'-0"

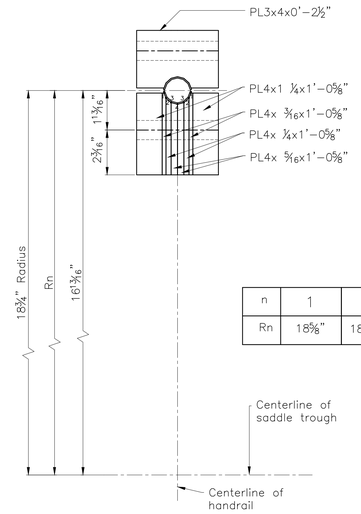

n	1	2	3	4
Rn	18 5/8"	18 49/128"	18 9/32"	18 5/64"

HANDRAIL CABLE SADDLE DETAIL (A/6)

SCALE:4"=1'-0"

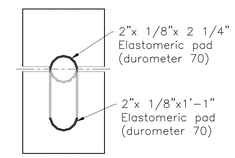

ELASTOMERIC PADS AT HANDRAIL SADDLE

SCALE: 4"=1'-0"

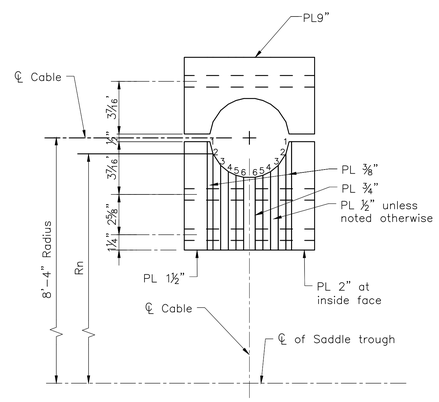

CABBLE SADDLE DETAIL (2/710)

3"=1'-0"

n	1	2	3	4	5	6
Rn	8'-3 3/8"	8'-2 123/128"	8'-2 27/128"	8'-1 51/64"	8'-1 7/128"	8'-1 55/128"

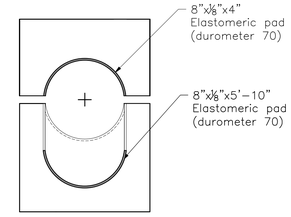

ELASTOMERIC PADS AT CABLE SADDLE

SCALE: 3"=1'-0"

1

NOTES:

1. See BR-S704 for WPs geometry data.
2. Work this sheet with BR-S711.

Seals

STATE OF KENTUCKY
KWONG MAN CHENG
22901
LICENSED
PROFESSIONAL ENGINEER
May 23, 2013

OPAC Consulting Engineers
315 Bay Street, Second Floor
San Francisco, CA 94945
(415)989-4551
www.opacengineers.com

LANDSCAPE ARCHITECT
Wallace Roberts & Todd, LLC
1700 Market Street
28th Floor
Philadelphia, PA 19103
tel 215.732.5215
fax 215.732.2551

Architect
BRAVURA
111 West Washington Street
Louisville, Kentucky 40202
T: (502) 584-0000
F: (502) 584-0829

The Parklands of Floyds Fork, Project 4A
The Strand, Turkey Run Park and Broad Run
Louisville, Kentucky

Owner:
21st Century Parks, Inc.
371 W. Main St., Suite 202
Louisville, Kentucky 40202

REV #	DATE	DESCRIPTION
	05/08/2013	ISSUED FOR BID
1	05/23/2013	ADDENDUM #1: CORRECTIONS AND REVISED HANDRAIL

Job No:	12300.4AC
Date:	May 23, 2013
Scale:	See Drawing
Drawn By:	L.Chien

ISSUED FOR ADDENDUM #1

Drawing Title:

Parklands of Floyds Fork
1 ADD-ALT. NO.1
PROJECT 4A
North Cable Bent - 2

Drawing No:

BR-S712

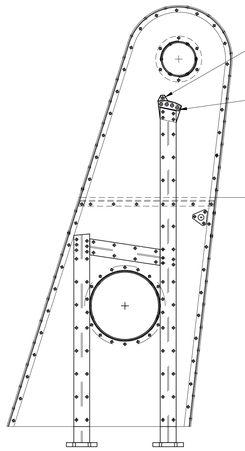

HANDRAIL OUTER PLATE
SCALE: 3/8"=1'-0"

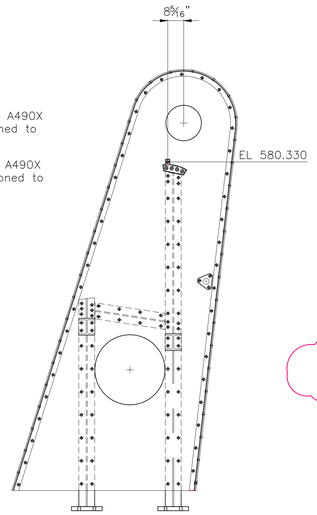

HANDRAIL INNER PLATE
SCALE: 3/8"=1'-0"

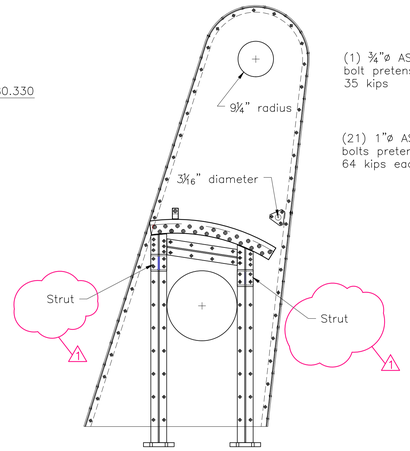

MAIN CABLE INNER PLATE
SCALE: 3/8"=1'-0"

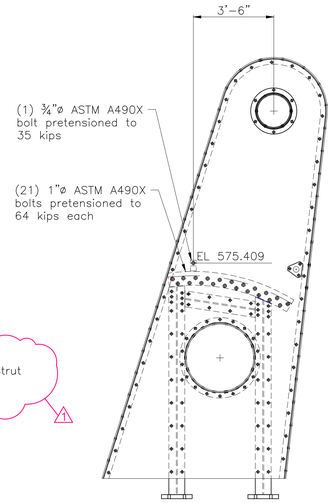

MAIN CABLE OUTER PLATE
SCALE: 3/8"=1'-0"

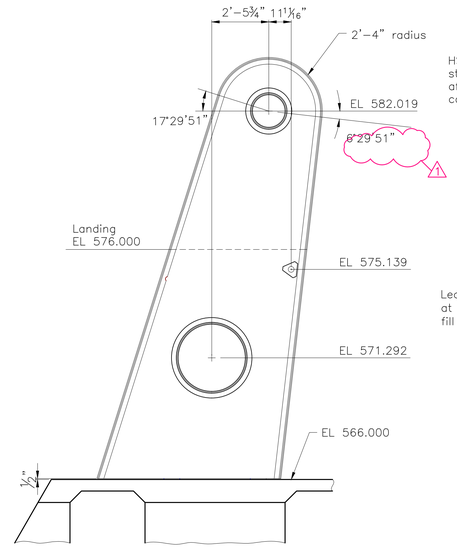

ARMATURE GEOMETRY
SCALE: 3/8"=1'-0"

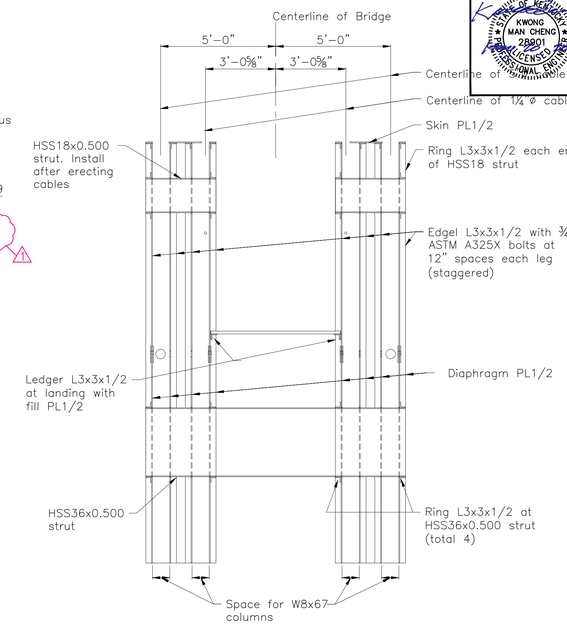

ARMATURE SECTION
SCALE: 3/8"=1'-0"

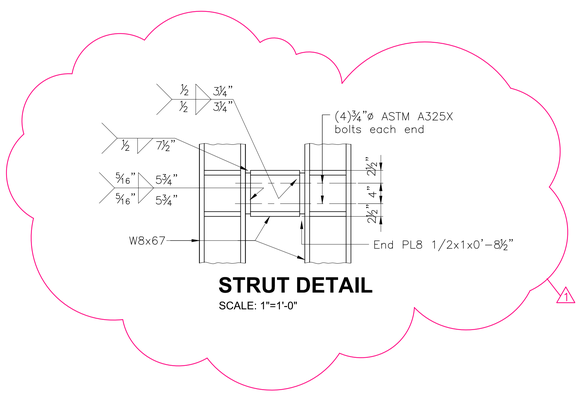

STRUT DETAIL
SCALE: 1"=1'-0"

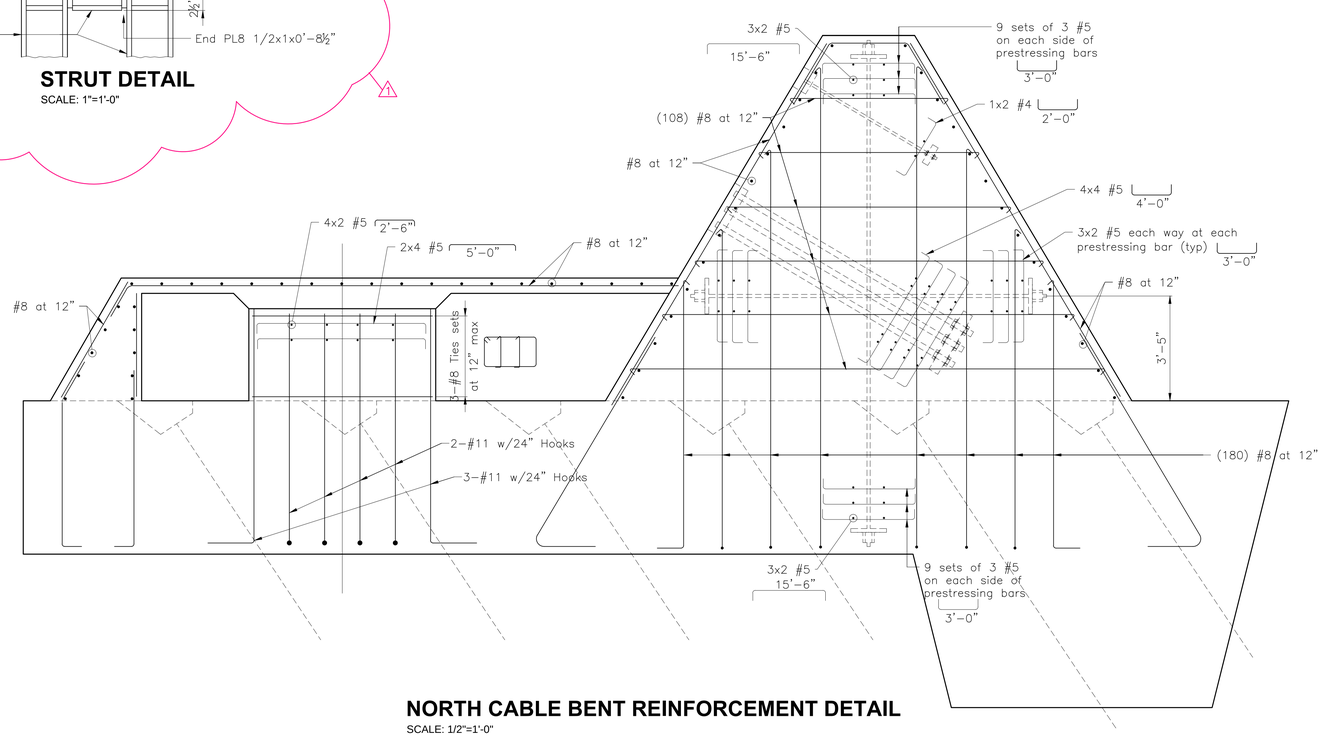

NORTH CABLE BENT REINFORCEMENT DETAIL
SCALE: 1/2"=1'-0"

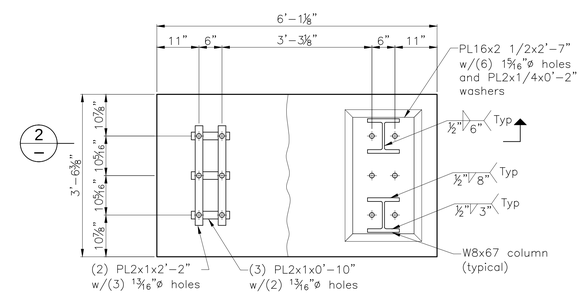

BENT COLUMN BASE DETAIL 1
SCALE: 3/4"=1/-0"

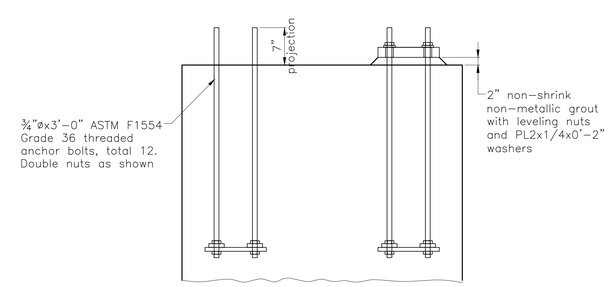

BENT COLUMN BASE SECTION 2
SCALE: 3/4"=1/-0"

NOTES:

1. See BR-S704 for WPs geometry data.
2. See BR-706 for North Anchorage details.
3. Work this sheet with BR-S712.

See BR-S719 and BR-S720 for Armature details.

Seals

STATE OF KENTUCKY KWONG MAN CHENG 28901 LICENSED PROFESSIONAL ENGINEER

OPAC Consulting Engineers
315 Bay Street, Second Floor
San Francisco, CA 94945
(415)989-4551
www.opacengineers.com

LANDSCAPE ARCHITECT
WRT
Wallace Roberts & Todd, LLC
1700 Market Street
28th Floor
Philadelphia, PA 19103
tel 215.732.5215
fax 215.732.2551

Architect
BRAVURA
111 West Washington Street
Louisville, Kentucky 40202
P: (502) 584-6000
F: (502) 584-0829

The Parklands of Floyds Fork, Project 4A
The Strand, Turkey Run Park and Broad Run
Louisville, Kentucky

Owner:
21st Century Parks, Inc.
371 W. Main St., Suite 202
Louisville, Kentucky 40202

REV #	DATE	DESCRIPTION
	05/08/2013	ISSUED FOR BID
1	06/23/2013	ADDENDUM #1: CORRECTIONS AND REVISED HANDRAIL

Job No:	12300.4AC
Date:	May 23, 2013
Scale:	As Noted
Drawn By:	L.Chien

ISSUED FOR ADDENDUM #1

Drawing Title:
Parklands of Floyds Fork
1 ADD-ALT. NO.1
PROJECT 4A
North Cable Bent
-- 1

Drawing No:
BR-S711

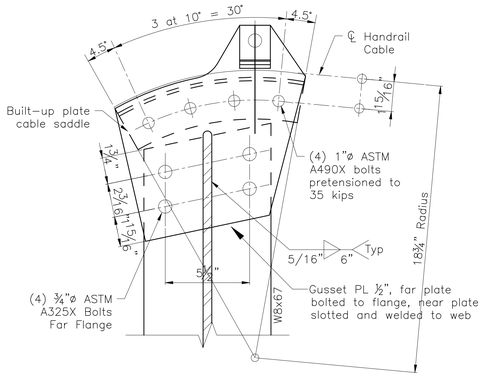

HANDRAIL SADDLE CONNECTION DETAIL (1/0)

SCALE: 3"=1'-0"

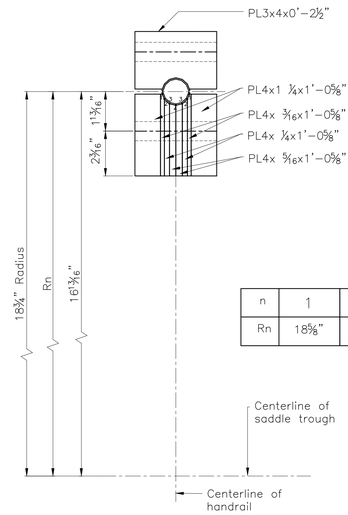

n	1	2	3	4
Rn	18 5/8"	18 49/128"	18 55/32"	18 55/64"

HANDRAIL CABLE SADDLE DETAIL (A/6)

SCALE:4"=1'-0"

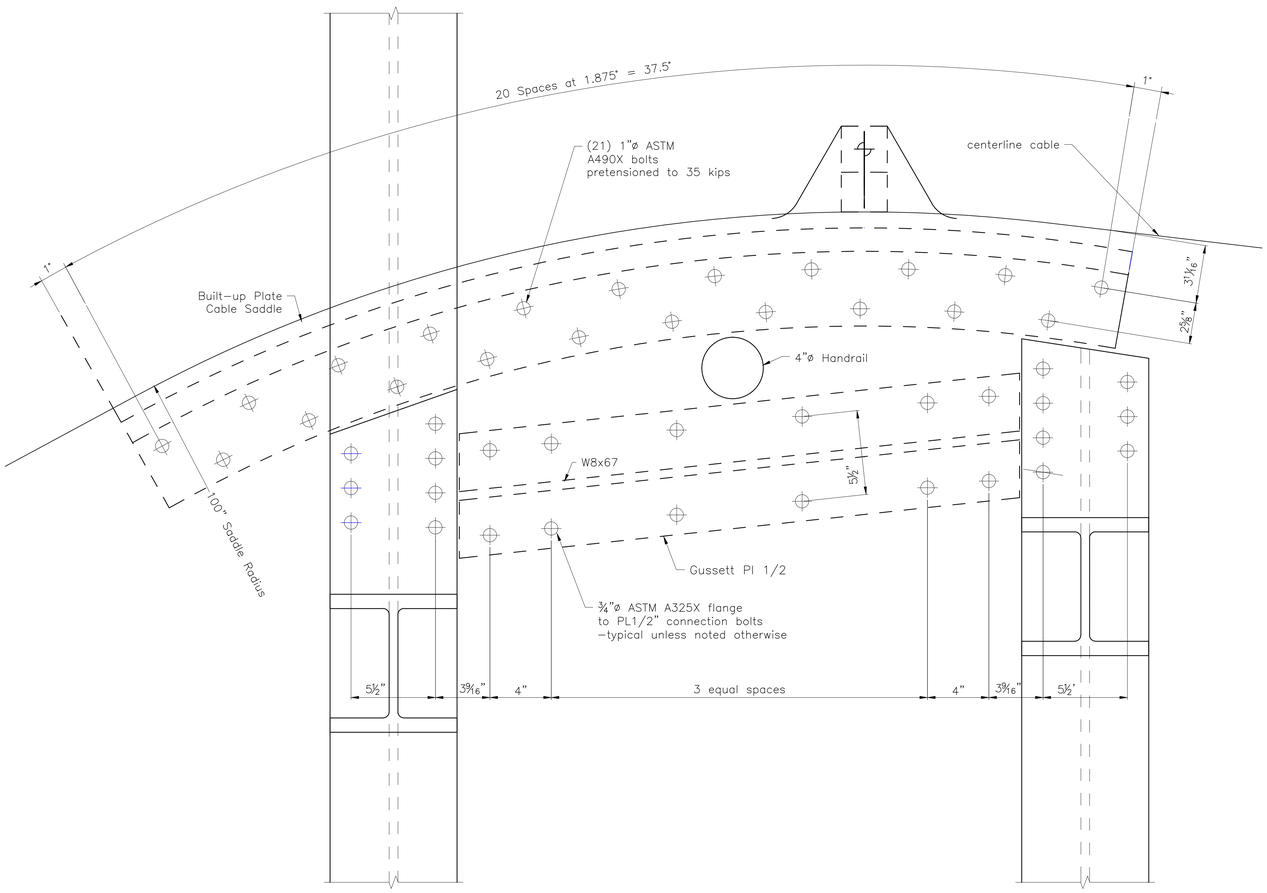

CABLE SADDLE SUPPORT CONNECTION (1/710)

SCALE: 3"=1'-0"

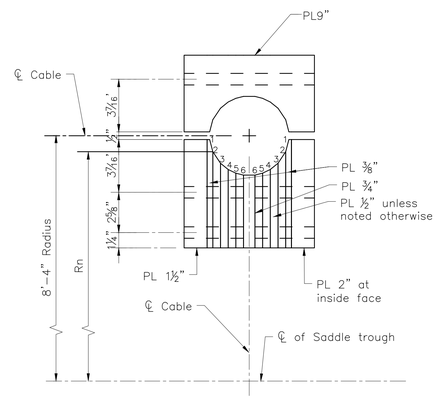

CABLE SADDLE DETAIL (2/710)

SCALE: 3"=1'-0"

n	1	2	3	4	5	6
Rn	8'-3 3/8"	8'-2 123/128"	8'-2 27/128"	8'-1 51/64"	8'-1 7/128"	8'-1 55/128"

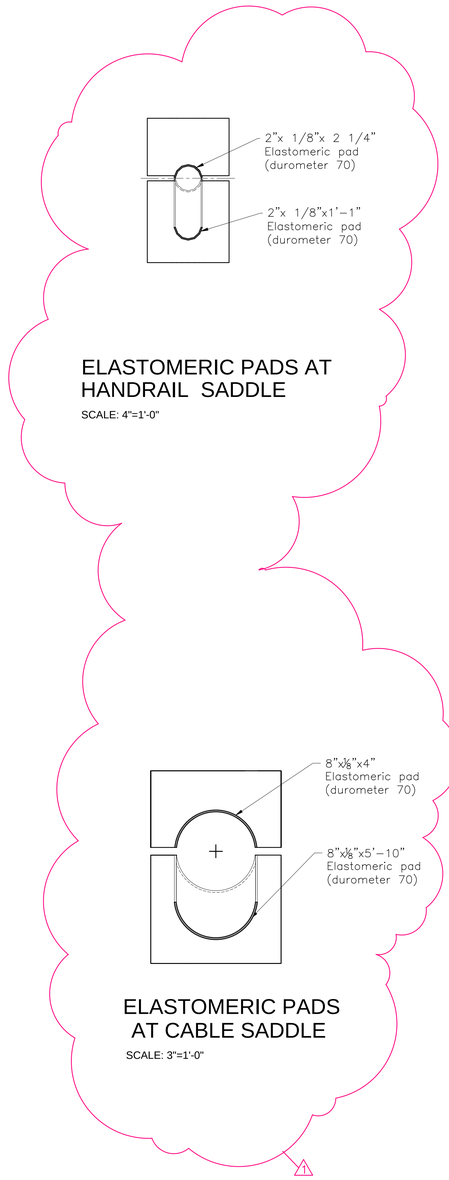

ELASTOMERIC PADS AT HANDRAIL SADDLE

SCALE: 4"=1'-0"

ELASTOMERIC PADS AT CABLE SADDLE

SCALE: 3"=1'-0"

NOTES:
1. See BR-S704 for WPs geometry data.
2. Work this sheet with BR-S709.

Seals

STATE OF KENTUCKY — KWONG MAN CHENG — 28904 — LICENSED PROFESSIONAL ENGINEER

May 22, 2013

OPAC Consulting Engineers
315 Bay Street, Second Floor
San Francisco, CA 94945
(415)989-4551
www.opacengineers.com

LANDSCAPE ARCHITECT
Wallace Roberts & Todd, LLC
1700 Market Street
28th Floor
Philadelphia, PA 19103
tel 215.732.5215
fax 215.732.2551

Architect
BRAVURA
111 West Washington Street
Louisville, Kentucky 40202
T: (502) 584-0000
F: (502) 584-0829

The Parklands of Floyds Fork, Project 4A
The Strand, Turkey Run Park and Broad Run
Louisville, Kentucky

Owner:
21st Century Parks, Inc.
371 W. Main St., Suite 202
Louisville, Kentucky 40202

REV #	DATE	DESCRIPTION
	05/08/2013	ISSUED FOR BID
1	06/23/2013	ADDENDUM #1: CORRECTIONS AND REVISED HANDRAIL

Job No:	12300.4AC
Date:	May 23, 2013
Scale:	As Noted
Drawn By:	L.Chien

ISSUED FOR ADDENDUM #1

Drawing Title:
Parklands of Floyds Fork
ADD-ALT. NO.1
PROJECT 4A
South Cable Bent - 2

Drawing No:
BR-S710

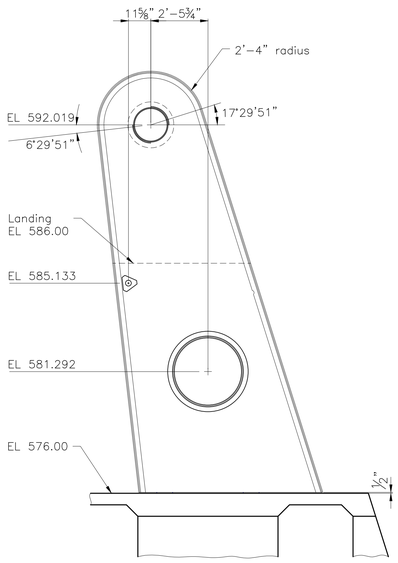

ARMATURE GEOMETRY
SCALE: 3/8"=1'-0"

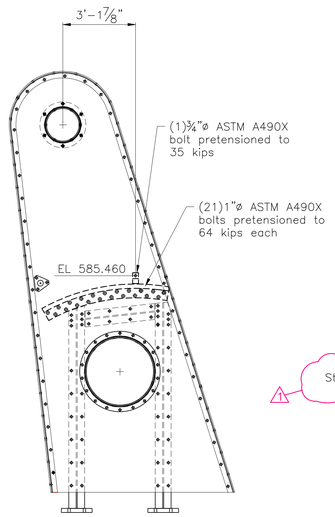

MAIN CABLE OUTER PLATE
SCALE: 3/8"=1'-0"

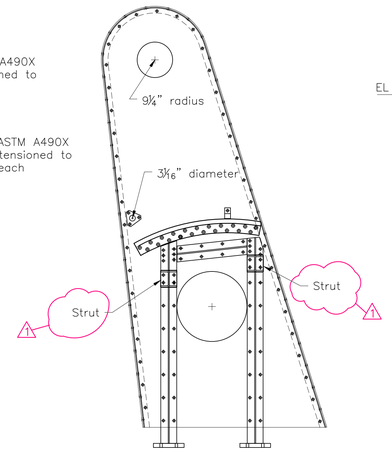

MAIN CABLE INNER PLATE
SCALE: 3/8"=1'-0"

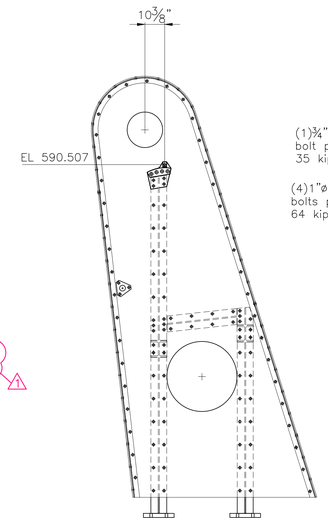

HANDRAIL INNER PLATE
SCALE: 3/8"=1'-0"

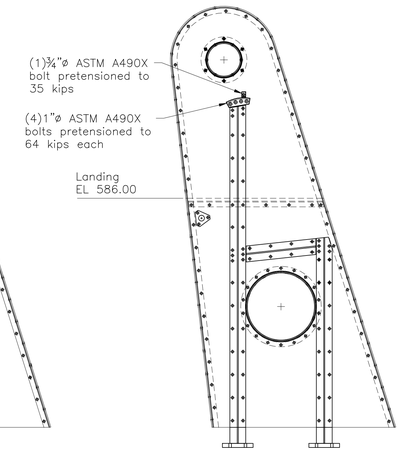

HANDRAIL OUTER PLATE
SCALE: 3/8"=1'-0"

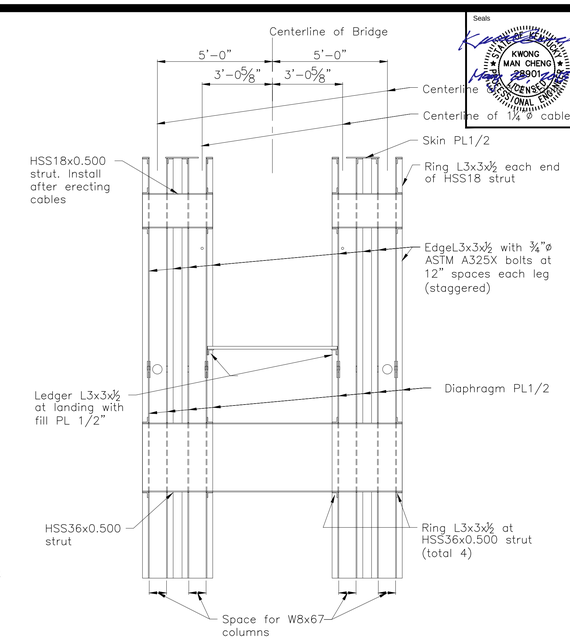

ARMATURE SECTION
SCALE: 3/8"=1'-0"

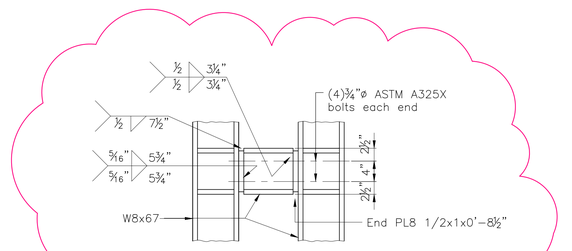

STRUT DETAIL
SCALE: 1"=1'-0"

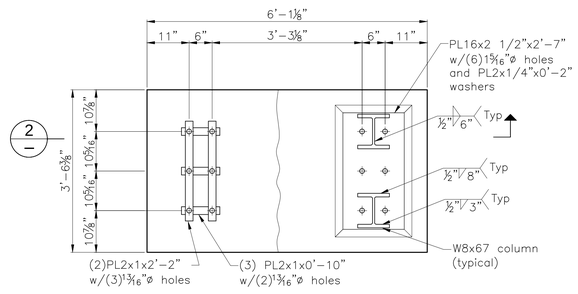

BENT COLUMN BASE DETAIL 2/1
SCALE: 3/4"=1/-0"

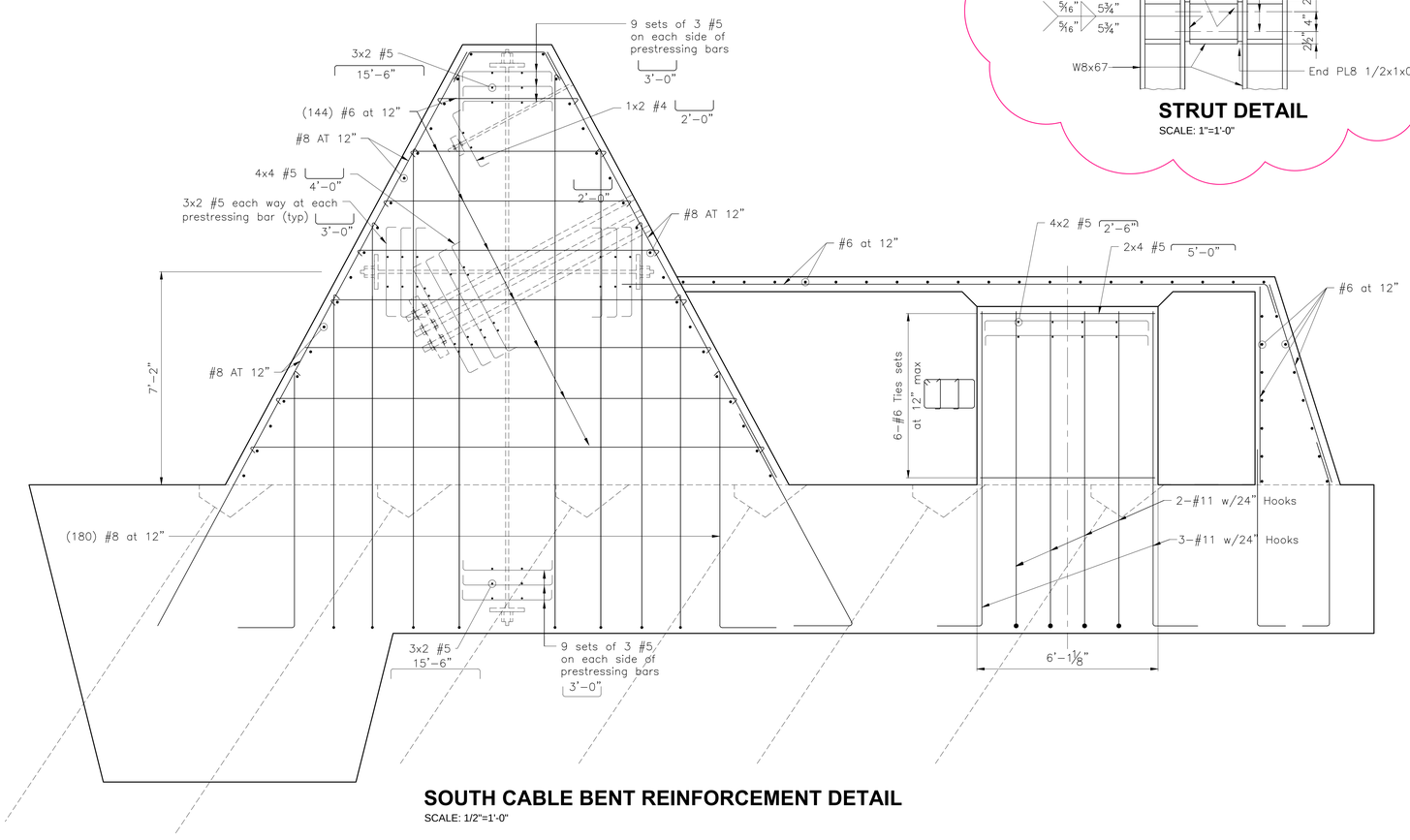

SOUTH CABLE BENT REINFORCEMENT DETAIL
SCALE: 1/2"=1'-0"

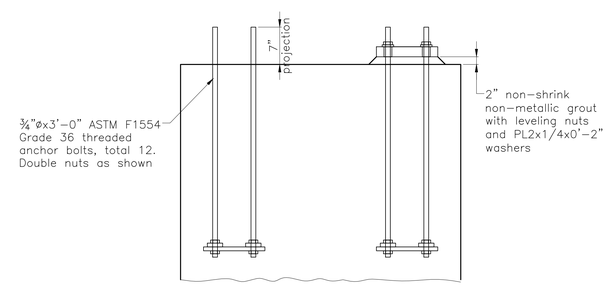

BENT COLUMN BASE SECTION 2/1
SCALE: 3/4"=1/-0"

NOTES:

1. See BR-S704 for WPs geometry data.
2. See BR-705 for South Anchorage details.
3. Work this sheet with BR-S710.

Seals

STATE OF KENTUCKY
KWONG MAN CHENG
28901
LICENSED PROFESSIONAL ENGINEER

OPAC Consulting Engineers
315 Bay Street, Second Floor
San Francisco, CA 94945
(415)989-4551
www.opacengineers.com

LANDSCAPE ARCHITECT
WRT
Wallace Roberts & Todd, LLC
1700 Market Street
20th Floor
Philadelphia, PA 19103
tel 215.732.5215
fax 215.732.2551

Architect
BRAVURA
111 West Washington Street
Louisville, Kentucky 40202
T: (502) 584-9900
F: (502) 584-0829

The Parklands of Floyds Fork, Project 4A
The Strand, Turkey Run Park and Broad Run
Louisville, Kentucky

Owner:
21st Century Parks, Inc.
371 W. Main St., Suite 202
Louisville, Kentucky 40202

REV #	DATE	DESCRIPTION
	05/06/2013	ISSUED FOR BID
1	05/23/2013	ADDENDUM #1: CORRECTIONS AND REVISED HANDRAIL

Job No:	12300.4AC
Date:	May 23, 2013
Scale:	As Noted
Drawn By:	L.Chien

ISSUED FOR ADDENDUM #1

Drawing Title:
Parklands of Floyds Fork
ADD-ALT. NO.1
PROJECT 4A
South Cable Bent - 1

Drawing No:
BR-S709

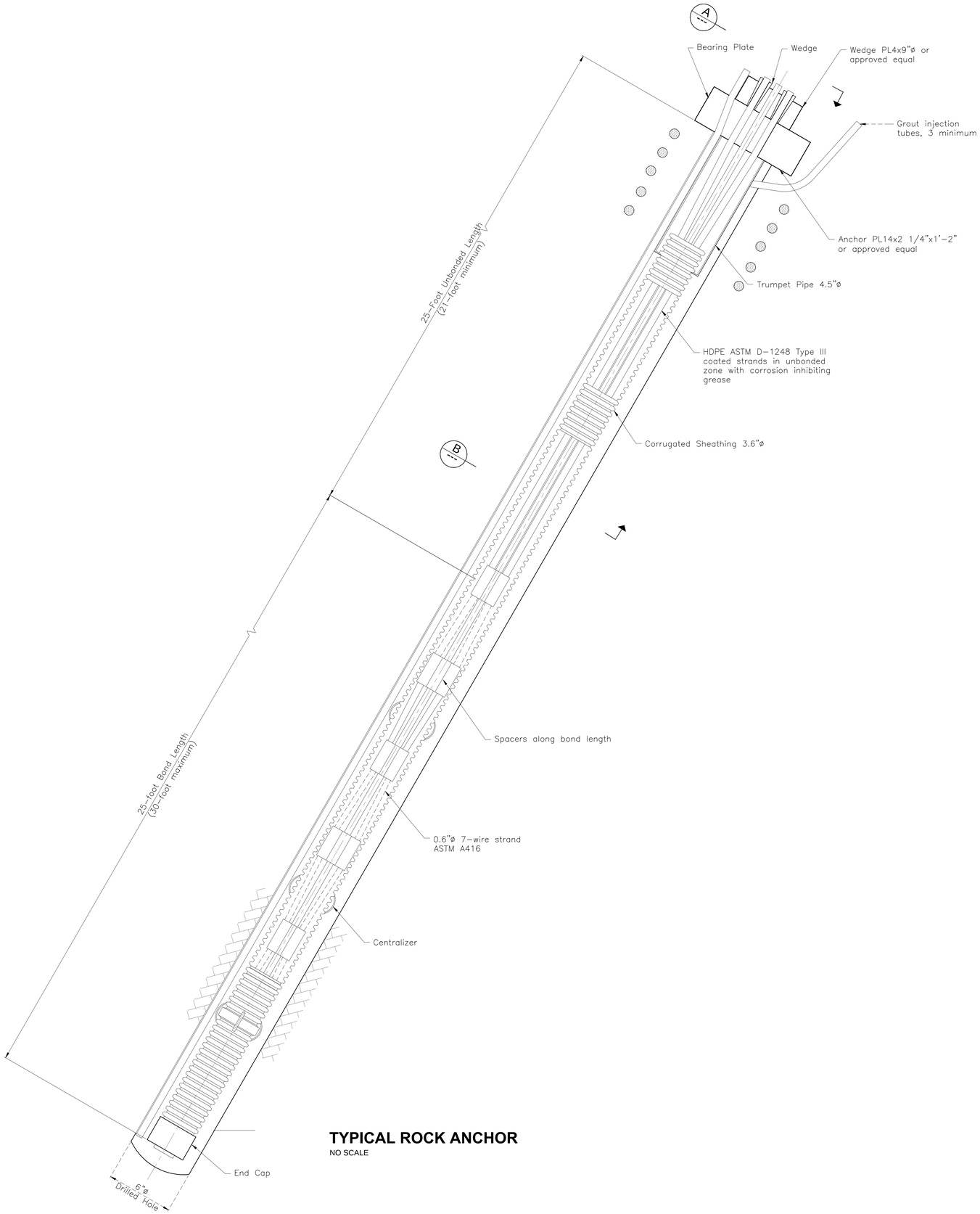

TYPICAL ROCK ANCHOR

NO SCALE

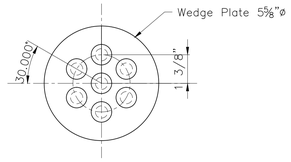

WEDGE PLATE TOP VIEW

4"=1'-0"

A

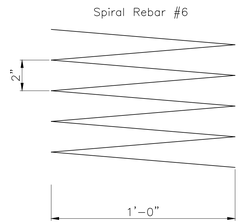

SPIRAL

NO SCALE

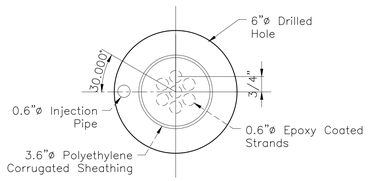

SECTION

4"=1'-0"

B

NOTES :

1. See BR-S702 for rock anchor notes.
2. Contractor's bid shall include an allowance to increase the rock anchor length to up to 60 feet.

Seals

STATE OF KENTUCKY
KWONG MAN CHENG
18904
LICENSED
PROFESSIONAL ENGINEER
May 22, 2013

OPAC Consulting Engineers
315 Bay Street, Second Floor
San Francisco, CA 94945
(415)989-4551
www.opacengineers.com

LANDSCAPE ARCHITECT
WRT
Wallace Roberts & Todd, LLC
1700 Market Street
28th Floor
Philadelphia, PA 19103
tel 215.732.5215
fax 215.732.2551

Architect
BRAVURA
111 West Washington Street
Louisville, Kentucky 40202
T: (502) 584-6000
F: (502) 584-6029

The Parklands of Floyds Fork, Project 4A

The Strand, Turkey Run Park and Broad Run

Louisville, Kentucky

Owner:
21st Century Parks, Inc.
371 W. Main St., Suite 202
Louisville, Kentucky 40202

REV #	DATE	DESCRIPTION
	05/08/2013	ISSUED FOR BID
1	05/22/2013	ADDENDUM #1 CORRECTIONS AND REVISED HANDRAIL

Job No:	12300.4AC
Date:	May 23, 2013
Scale:	As Noted
Drawn By:	L.Chien

ISSUED FOR ADDENDUM #1

Drawing Title:

Parklands of Floyds Fork

ADD-ALT. NO.1
PROJECT 4A
Rock Anchor Details

Drawing No:

BR-S708

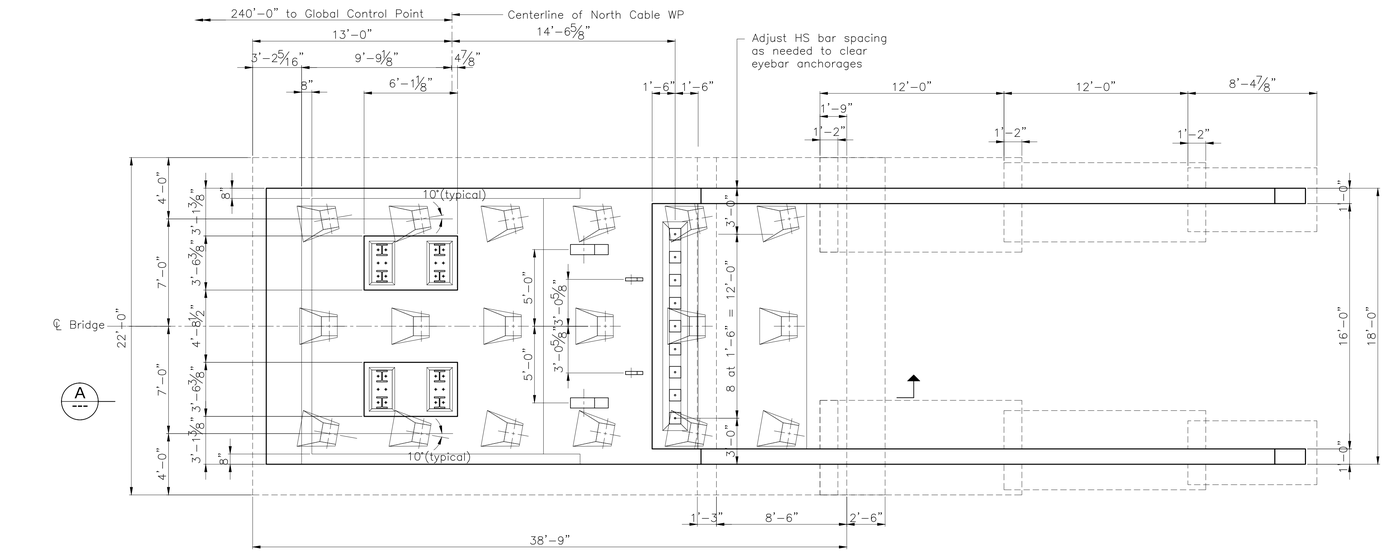

NORTH ANCHOR PAD PLAN

SCALE: 1/4"=1'-0"

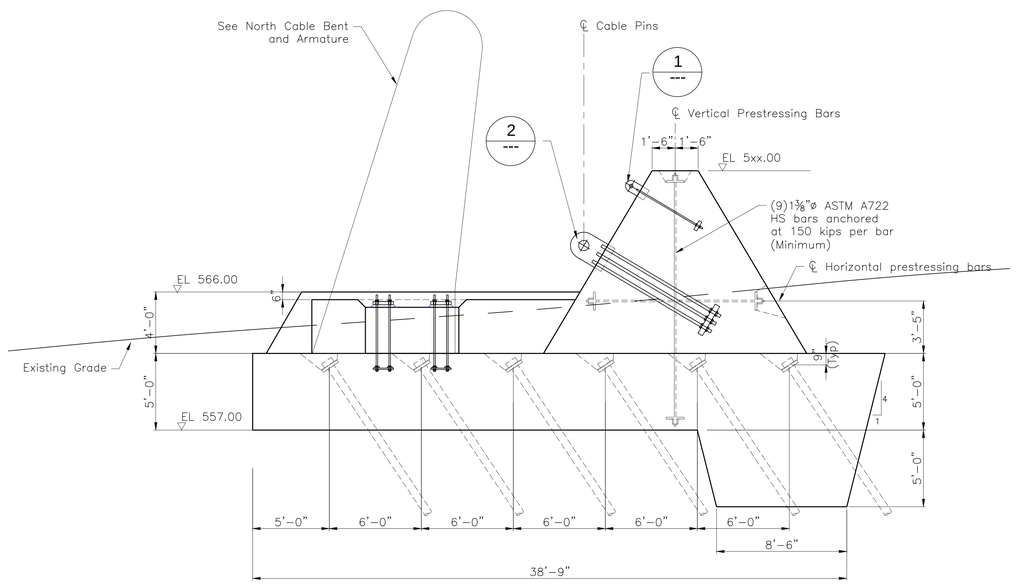

NORTH ANCHOR PAD SECTION A

SCALE: 1/4"=1'-0"

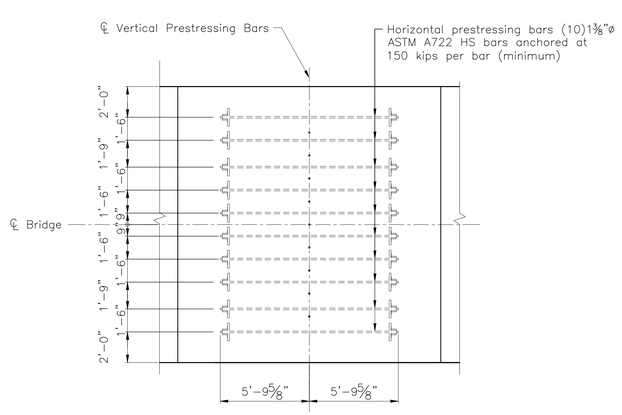

HORIZONTAL PRESTRESSING PLAN

SCALE: 1/4"=1'-0"

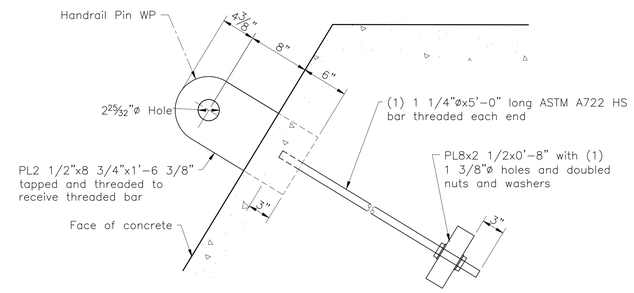

HANDRAIL EYEBAR ANCHORAGE 1

SCALE: 1 1/2"=1'-0"

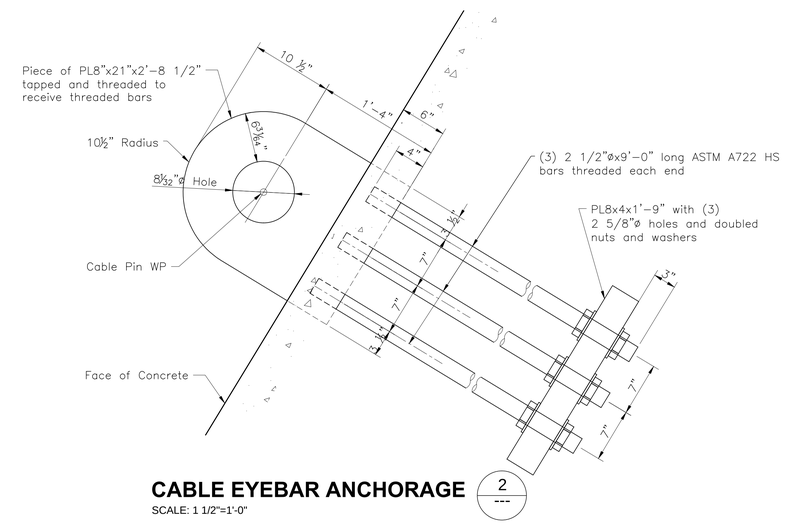

CABLE EYEBAR ANCHORAGE 2

SCALE: 1 1/2"=1'-0"

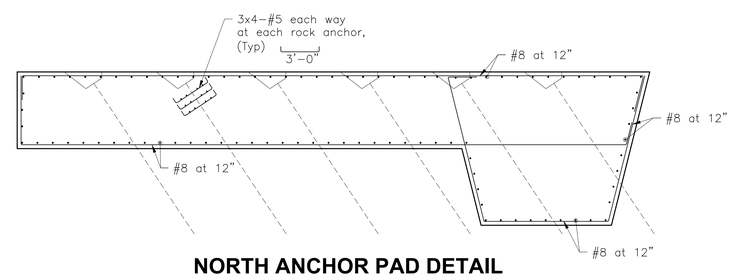

NORTH ANCHOR PAD DETAIL

SCALE: 1/4"=1'-0"

NOTES:

1. See BR-S703 and BR-S704 for GCP and WPs geometry data.
2. See BR-S711 and BR-S712 for Cable Bent details.
3. See BR-S719 and BR-S720 for Armature details.

See BR-S701 and BR-S708 for Rock Anchor general notes and details.

Seals

STATE OF KENTUCKY KWONG MAN CHENG 18801 LICENSED PROFESSIONAL ENGINEER May 23, 2013

OPAC Consulting Engineers
315 Bay Street, Second Floor
San Francisco, CA 94945
(415)989-4551
www.opacengineers.com

LANDSCAPE ARCHITECT
WRT
Wallace Roberts & Todd, LLC
1700 Market Street
28th Floor
Philadelphia, PA 19103
tel 215.732.5215
fax 215.732.2551

Architect
BRAVURA
111 West Washington Street
Louisville, Kentucky 40202
T: (502) 584-0000
F: (502) 584-0829

The Parklands of Floyds Fork, Project 4A
The Strand, Turkey Run Park and Broad Run
Louisville, Kentucky

Owner:
21st Century Parks, Inc.
371 W. Main St., Suite 202
Louisville, Kentucky 40202

REV #	DATE	DESCRIPTION
	05/06/2013	ISSUED FOR BID
1	05/23/2013	ADDENDUM #1, CORRECTIONS AND REVISED HANDRAIL

Job No:	12300.4AC
Date:	May 23, 2013
Scale:	As Noted
Drawn By:	L.Chien

ISSUED FOR ADDENDUM #1

Drawing Title:

Parklands of Floyds Fork
ADD-ALT. NO.1
PROJECT 4A
North Anchorage

Drawing No:

BR-S707

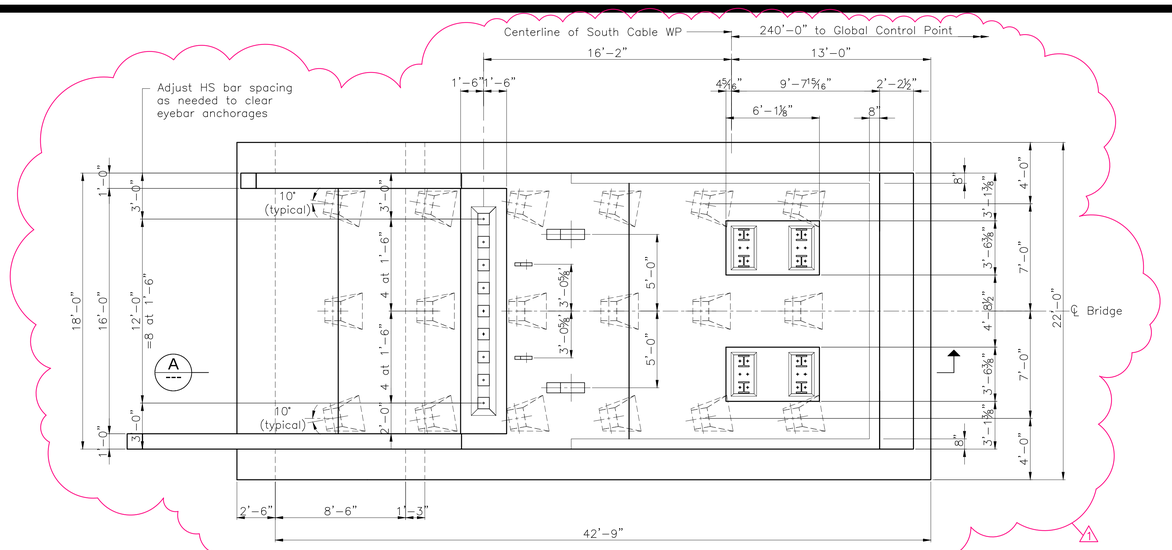

SOUTH ANCHOR PAD PLAN

SCALE: 1/4"=1'-0"

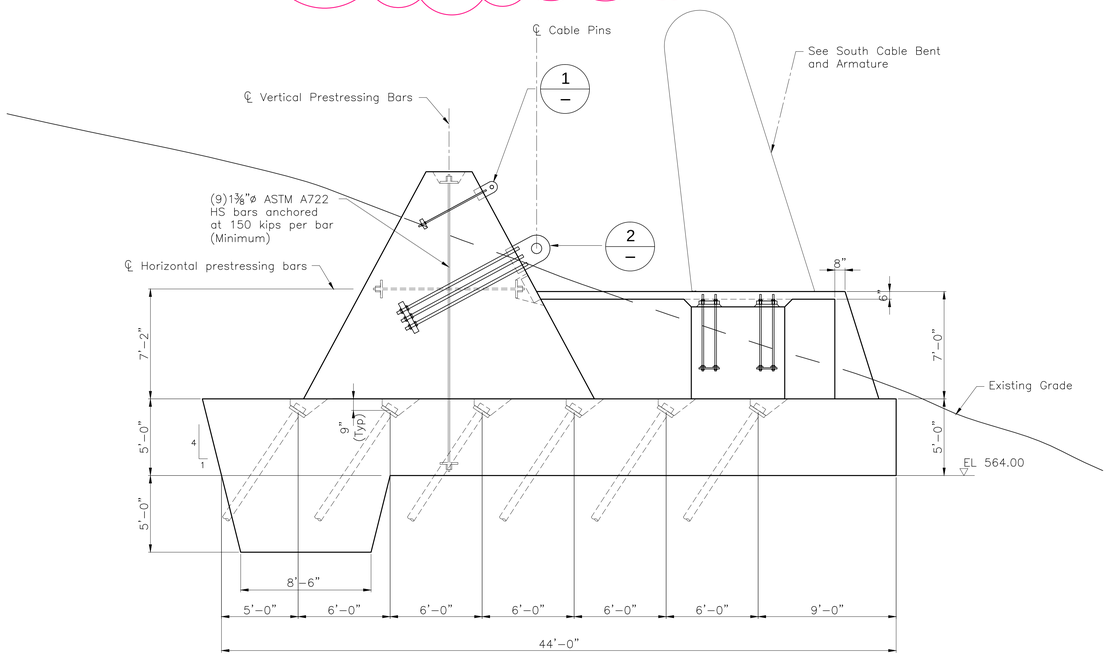

SOUTH ANCHOR PAD SECTION (A)

SCALE: 1/4"=1'-0"

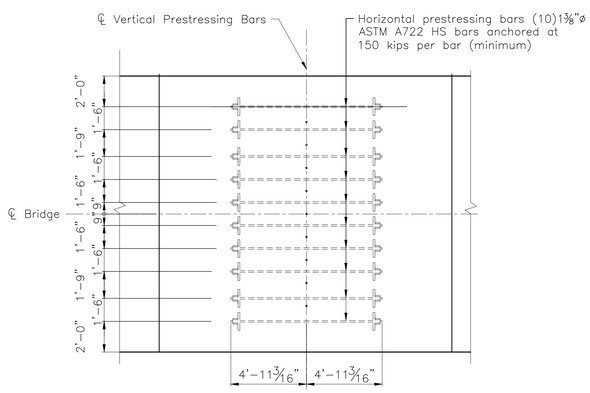

HORIZONTAL PRESTRESSING PLAN

SCALE: 1/4"=1'-0"

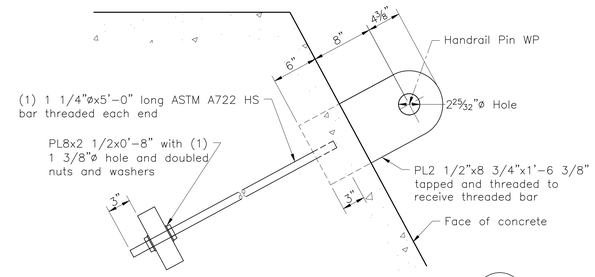

HANDRAIL EYEBAR ANCHORAGE (1)

SCALE: 1 1/2"=1'-0"

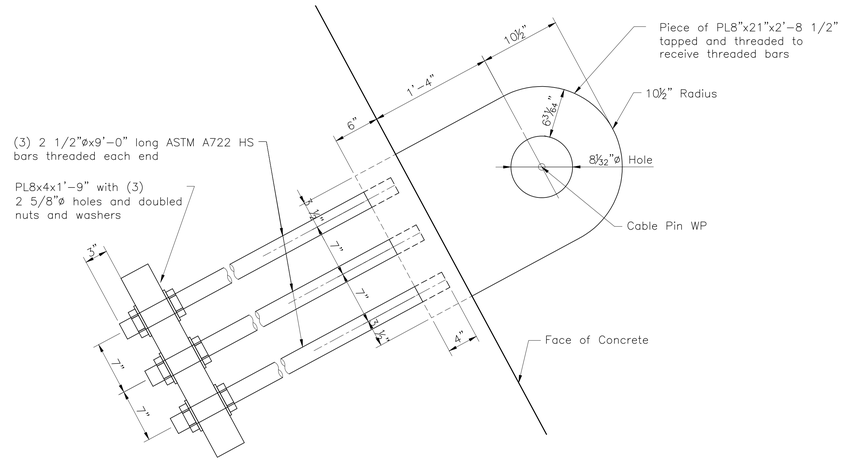

CABLE EYEBAR ANCHORAGE (2)

SCALE: 1 1/2"=1'-0"

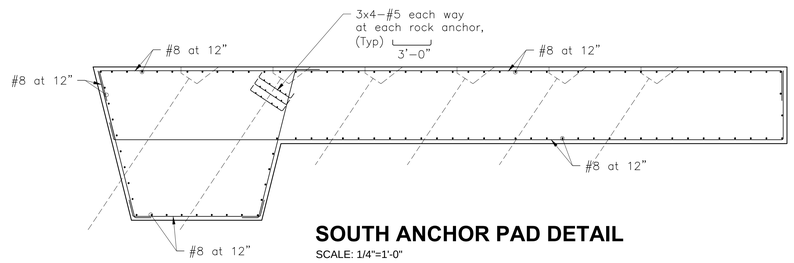

SOUTH ANCHOR PAD DETAIL

SCALE: 1/4"=1'-0"

NOTES:

1. See BR-S703 and BR-S704 for GCP and WPs geometry data.
2. See BR-S709 and BR-S710 for Cable Bent details.
3. See BR-S717 and BR-S718 for Armature details.
4. See BR-S701 and BR-S708 for Rock Anchor general notes and details.

Seals

STATE OF KENTUCKY KWONG MAN CHENG 18907 LICENSED PROFESSIONAL ENGINEER

May 22, 2013

OPAC Consulting Engineers
315 Bay Street, Second Floor
San Francisco, CA 94945
(415)989-4551
www.opacengineers.com

LANDSCAPE ARCHITECT
WRT
Wallace Roberts & Todd, LLC
1700 Market Street
28th Floor
Philadelphia, PA 19103
tel 215.732.5215
fax 215.732.2551

Architect
BRAVURA
111 West Washington Street
Louisville, Kentucky 40202
T: (502) 584-9000
F: (502) 584-6029

The Parklands of Floyds Fork, Project 4A
The Strand, Turkey Run Park and Broad Run
Louisville, Kentucky

Owner:
21st Century Parks, Inc.
371 W. Main St., Suite 202
Louisville, Kentucky 40202

REV #	DATE	DESCRIPTION
	06/08/2013	ISSUED FOR BID
1	05/23/2013	ADDENDUM #1, CORRECTIONS AND REVISED HANDRAIL

Job No:	12300.4AC
Date:	May 23, 2013
Scale:	As Noted
Drawn By:	L.Chien

ISSUED FOR ADDENDUM #1

Drawing Title:

Parklands of Floyds Fork

ADD-ALT. NO.1

PROJECT 4A South Anchorage

Drawing No:

BR-S706

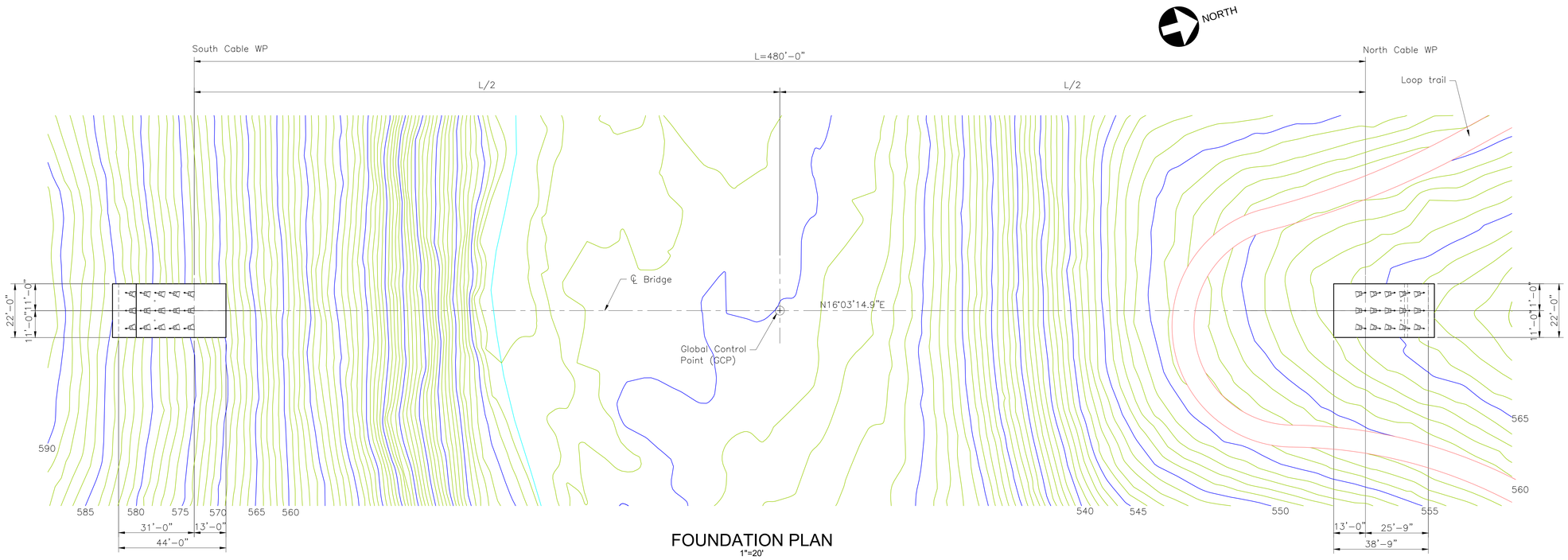

FOUNDATION PLAN

1"=20'

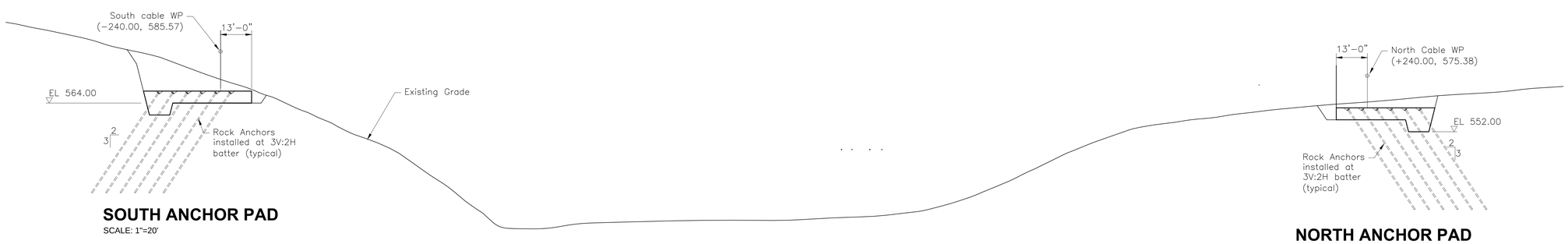

SOUTH ANCHOR PAD

SCALE: 1"=20'

NORTH ANCHOR PAD

SCALE: 1"=20'

FOUNDATION ELEVATION

1"=20'

NOTES:

1. See BR-S703 and BR-S704 for GCP and WPs geometry data.
2. Contractor shall verify all controlling field dimensions before ordering or fabricating any materials. The profile of the cables and WPs are based on dead load only.
3. See BR-S706 and BR-S707 for anchorage details.
4. See BR-S708 for Rock Anchor details.

Seals

STATE OF KENTUCKY
KWONG MAN CHENG
28907
LICENSED
PROFESSIONAL ENGINEER
May 22, 2013

OPAC Consulting Engineers
315 Bay Street, Second Floor
San Francisco, CA 94945
(415)989-4551
www.opacengineers.com

LANDSCAPE ARCHITECT
Wallace Roberts & Todd, LLC
1700 Market Street
28th Floor
Philadelphia, PA 19103
tel 215.732.5215
fax 215.732.2551

Architect
BRAVURA
111 West Washington Street
Louisville, Kentucky 40202
T: (502) 584-6000
F: (502) 584-0829

The Parklands of Floyds Fork, Project 4A
The Strand, Turkey Run Park and Broad Run
Louisville, Kentucky

Owner:
21st Century Parks, Inc.
371 W. Main St., Suite 202
Louisville, Kentucky 40202

REV #	DATE	DESCRIPTION
	05/08/2013	ISSUED FOR BID
1	05/23/2013	ADDENDUM #1: CORRECTIONS AND REVISED HANDRAIL

Job No:	12300.4AC
Date:	May 23, 2013
Scale:	As Noted
Drawn By:	L.Chien

ISSUED FOR ADDENDUM #1

Drawing Title:
Parklands of Floyds Fork
ADD-ALT. NO.1
PROJECT 4A
Foundation Layout

Drawing No:
BR-S705

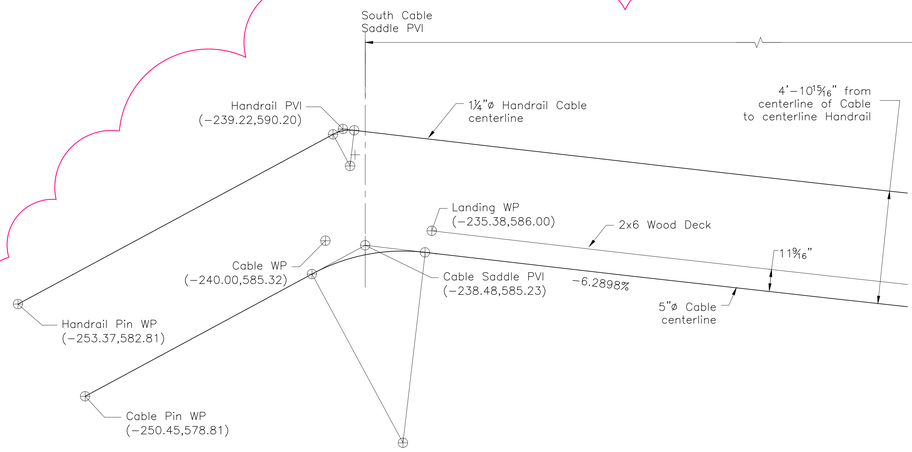

CABLE WP SOUTH

SCALE: 3/8"=1'-0"

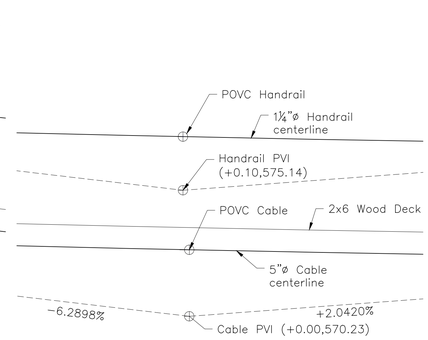

CABLE WP MID - SPAN

SCALE: 3/8"=1'-0"

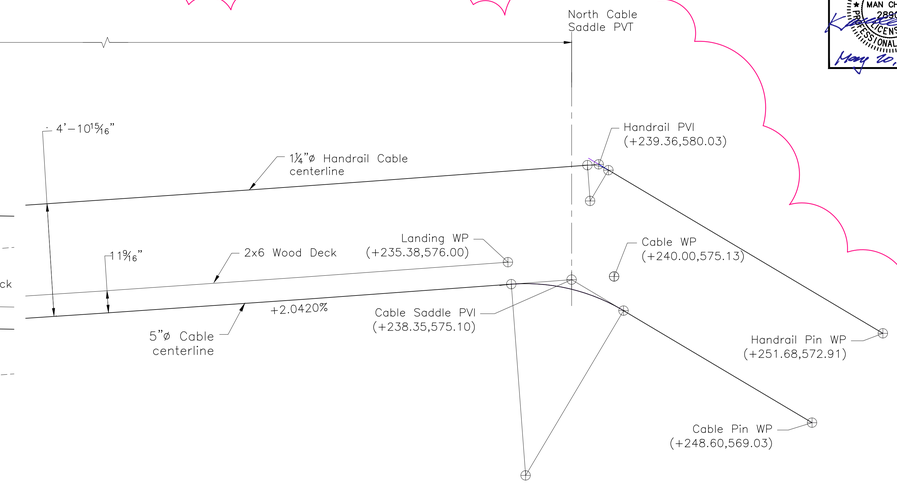

CABLE WP NORTH

SCALE: 3/8"=1'-0"

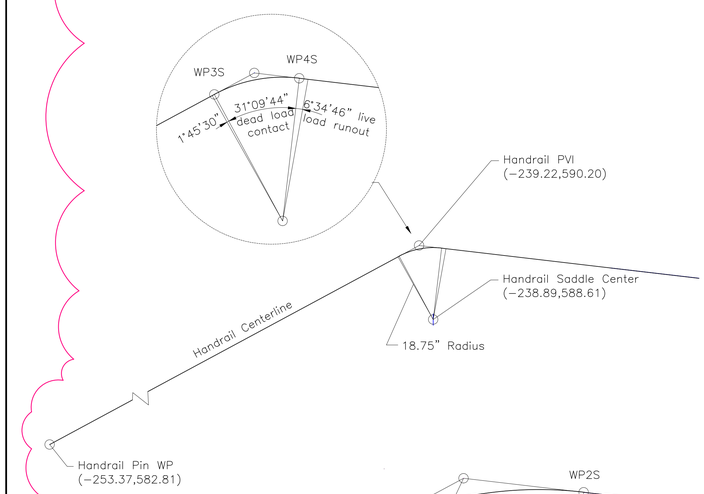

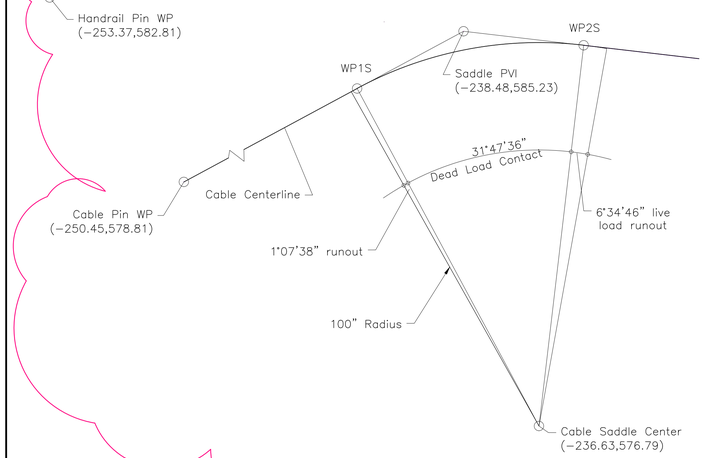

SADDLE WP SOUTH

SCALE: 3/4"=1'-0"

NOTES:

1. See BR-S703 for the global coordinates of the Global Control Point (GCP).
2. For layout of the bridge workpoints, the GCP is converted to the local coordinate system and is set to (x=0.00, y=0.00 and z=580.00). The longitudinal axis of the bridge is aligned with the x-axis and the mid-span of the bridge placed at x = 0.
3. The cable workpoints (WPs) are given in x - and y-dimensions (x, y) only. The x- dimension is measured along the longitudinal axis of the bridge and the y-dimension is the elevation. The cable workpoints are the same for both the west cables (Cable and Handrail) and east cables (Cable and Handrail).
4. The tangent workpoints WP1S, WP2s, W3S, W4S, WP1N, WP2N, WP3N and WP4N are to be determined from Pin WP, Cable WP and the specified radius.
5. The WP5 and cable profile shown are based on dead loads only.
6. Fabrication of all structural steel and structural strand shall be based on the dead load geometry shown here, except as noted on the framing plans.

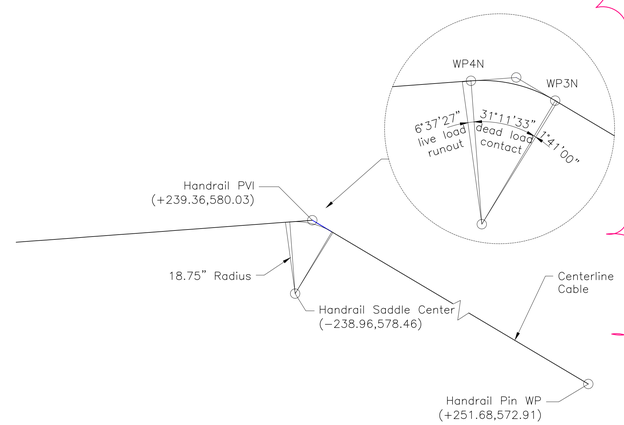

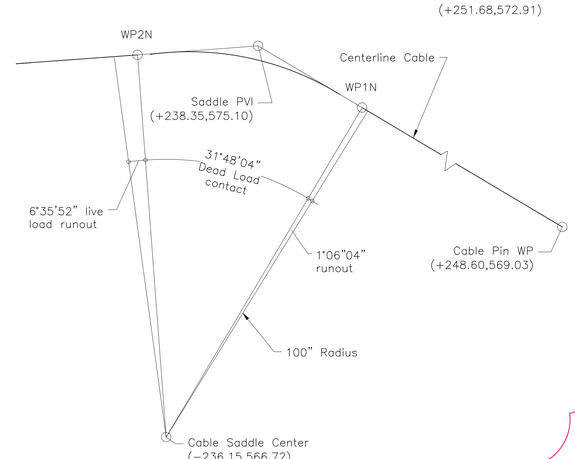

SADDLE WP NORTH

SCALE: 3/4"=1'-0"

Seals

STATE OF KENTUCKY — KWONG MAN CHENG — 28807 — LICENSED PROFESSIONAL ENGINEER

May 22, 2013

OPAC Consulting Engineers
315 Bay Street, Second Floor
San Francisco, CA 94945
(415)988-4551
www.opacengineers.com

LANDSCAPE ARCHITECT
Wallace Roberts & Todd, LLC
1700 Market Street
28th Floor
Philadelphia, PA 19103
tel 215.732.5215
fax 215.732.2551

Architect
BRAVURA
111 West Washington Street
Louisville, Kentucky 40202
T: (502) 584-0000
F: (502) 584-0029

The Parklands of Floyds Fork, Project 4A

The Strand, Turkey Run Park and Broad Run
Louisville, Kentucky

Owner:
21st Century Parks, Inc.
371 W. Main St., Suite 202
Louisville, Kentucky 40202

REV #	DATE	DESCRIPTION
	05/06/2013	ISSUED FOR BID
1	05/23/2013	ADDENDUM #1: CORRECTIONS AND REVISED HANDRAIL

Job No:	12300.4AC
Date:	May 23, 2013
Scale:	As Noted
Drawn By:	L.Chien

ISSUED FOR ADDENDUM #1

Drawing Title:

Parklands of Floyds Fork

ADD-ALT. NO.1
PROJECT 4A
Cable Workpoint Layout

Drawing No:

BR-S704

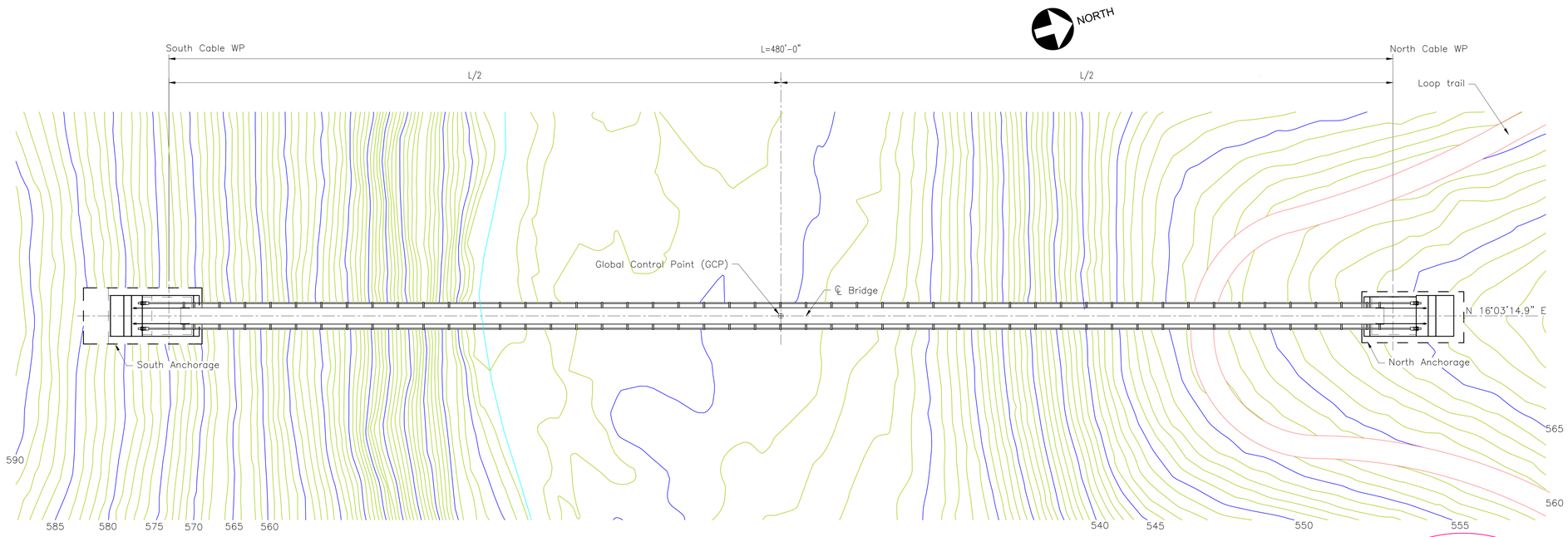

BRIDGE PLAN

scale: 1" = 20'

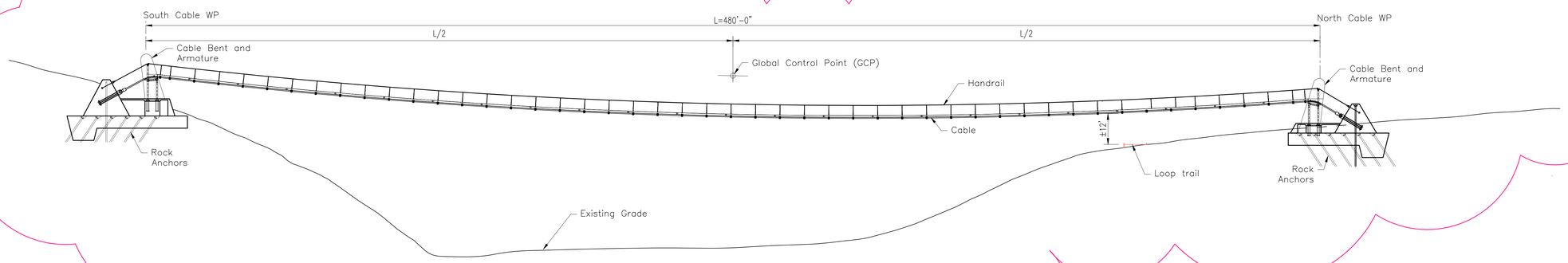

BRIDGE ELEVATION

scale: 1" = 20'

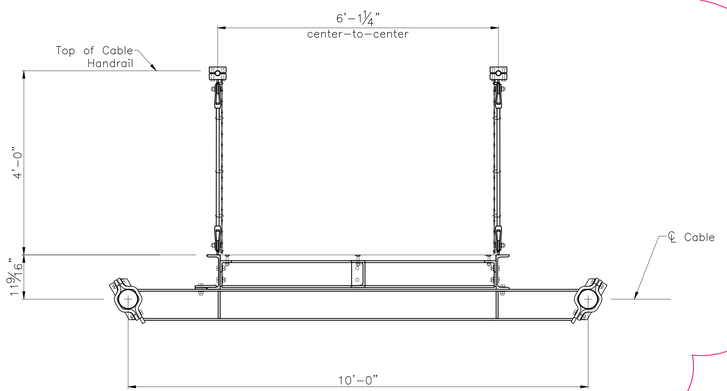

TYPICAL SECTION

SCALE: 3/4"=1'-0"

NOTES:

1. The cable WP locations were established from topographic map and data provided by others.
2. The Global Control Point (GCP) for the bridge is set at (N 1272095.2278, E 228234.0692, Elevation 580.00), which is located at the bridge center.
3. The orientation of the longitudinal axis of the bridge is N 16° 03' 14.9" E.
4. See BR-S704 for detailed layout of the bridge.
5. Contractor shall verify all controlling field dimensions before ordering or fabrication any materials.

Seals

STATE OF KENTUCKY
KWONG MAN CHENG
LICENSED
PROFESSIONAL ENGINEER
May 23, 2013

OPAC Consulting Engineers
315 Bay Street, Second Floor
San Francisco, CA 94945
(415)989-4551
www.opacengineers.com

LANDSCAPE ARCHITECT
WRT
Wallace Roberts & Todd, LLC
1700 Market Street
28th Floor
Philadelphia, PA 19103
tel 215.732.5215
fax 215.732.2551

Architect
BRAVURA
111 West Washington Street
Louisville, Kentucky 40202
T: (502) 584-9900
F: (502) 584-0829

The Parklands of Floyds Fork, Project 4A
The Strand, Turkey Run Park and Broad Run
Louisville, Kentucky

Owner:
21st Century Parks, Inc.
371 W. Main St., Suite 202
Louisville, Kentucky 40202

REV #	DATE	DESCRIPTION
	05/08/2013	ISSUED FOR BID
1	05/23/2013	ADDENDUM #1: CORRECTIONS AND REVISED HANDRAIL

Job No:	12300.4AC
Date:	May 23, 2013
Scale:	As Noted
Drawn By:	L.Chien

ISSUED FOR ADDENDUM #1

Drawing Title:
Parklands of Floyds Fork
ADD-ALT. NO.1
PROJECT 4A
Plan and Elevation

Drawing No:
BR-S703

DESIGN SPECIFICATIONS

1. ASCE/SEI 7-05 "Minimum Design Loads for Buildings and Other Structures" with Supplement No. 1 and Errata.
2. ASCE/SEI 19-10 "Structural Applications of Steel Cables for Buildings."
3. AISC/ANSI 360-10 "Specification for Structural Steel Buildings."
4. AISC/ANSI 341-05 "Seismic Provisions for Structural Steel Buildings" including Supplement No. 1.
5. ACI 318-05 "Building Code Requirements for Structural Concrete" and ACI 318R-05 "Commentary".
6. FHWA NHI-05-039 "Micropile Design and Construction."
7. FHWA-IF-99-015 "Geotechnical Engineering Circular No. 4, Ground Anchors and Anchored Systems."
8. AASHTO LRFD "Bridge Design Specifications," Fifth Edition, 2010
9. AWS/ANSI D1.1/D1.1M:2006 "Structural Welding Code - Steel."

WIND

1. The project wind design is based on a study conducted by West Wind Laboratory and published in their draft report entitled "Wind Study, Floyds Fork Park Catenary Bridge, Louisville, Kentucky" dated 5 March 2013.
2. The design wind speed at the bridge deck elevation is based on AASHTO LRFD Table 3.8.1.1-1 with
   V_{30} = 70 mph
   Z = 49.2 ft
   exposure = Suburban (same as wooded)

CONCRETE

1. The 28-day compressive strength of concrete shall be f 'c = 5 ksi.
2. The clear concrete cover shall be a minimum of 2" at formed faces and a minimum of 3" for concrete cast against the earth.

REINFORCING STEEL

1. Steel reinforcing shall conform to ASTM A706M Grade 60
2. Bar dimensions are out-to-out unless otherwise noted.
3. Spacing dimensions are center-to-center unless otherwise noted.

STRUCTURAL STEEL

1. Wide flange sections shall conform to ASTM A992 (Fy = 50 ksi)
2. Plates, bars and miscellaneous channel sections shall conform to ASTM A36 (Fy = 36 ksi)
3. HSS sections shall conform to ASTM A500 Grade B (Fy = 46 ksi).

PRESTRESSING BARS

1. High strength steel bar shall conform to ASTM A722 (Grade 150).

STRUCTURAL STRAND CABLE

1. Structural strand cables shall be zinc-coated and conform to ASTM A586-04a(2009)e1.
2. All end fittings shall be zinc-poured open spelter sockets and inspected using non-destructive testing that conform to ASTM E709-08 (2008) "Standard Guide for Magnetic Particle Testing." Other acceptable non-destructive testing methods may be considered and are subject to the approval of the Engineer.
3. Zinc for the open spelter sockets shall conform to ASTM B6-09 (2009).
4. Cables shall be prestretched and reference marks for the floorbeams provided on the main cables.

WIRE ROPE HANGER CABLES

1. Wire rope hanger cables shall be zinc-coated and conform to ASTM A603-98(2009)e1.
2. All end fittings shall be swaged ferrules.
3. All wire rope hangers shall be prestretched and cut to the same length.
4. Ferrule sockets shall be fabricated from steel plate and welded to the steel stringers prior to galvanizing.

WOOD DECKING

1. Wood decking shall be 2x6 ipe (lapacho subspecies) with a maximum moisture content of 12%.
2. Secure wood decking with (2)1/2"ϕ stainless steel carriage bolts at every support.
3. All holes in the ipe decking shall be pre-drilled and countersunk 1/4". Hole locations shall be coordinated with the steel fabricator.

ELASTOMERIC PADS

1. Sheets shall be neoprene manufactured from a vulcanized elastomeric compound containing neoprene as the sole elastomer and shall conform to AASHTO Grade 3 Designation M 251.
2. See plans for pad dimensions.

WELDED CONNECTIONS

1. Use E70XX electrodes.
2. Prequalified Welding Procedure Specifications shall be per Section 3 of AWS/ANSI D1.1.
3. Welding Procedure Specifications shall be qualified per Section 4 of AWS/ANSI D1.1, Parts A and B.
4. Welding personnel shall be qualified per Section 4 of AWS/ANSI D1.1, Parts A and C.
5. Fabrication and erection shall conform to Section 5 of AWS/ANSI D1.1.
6. Inspection and inspector qualifications shall conform to Section 6 of AWS/ANSI D1.1, Parts A and B.
7. Acceptance criteria shall conform to Section 6 of AWS/ANSI D1.1, Part C for visual inspection.
8. Testing procedures shall conform to Section 6 of AWS/ANSI D1.1, Parts D, E, F and G as applicable.

BOLTED CONNECTIONS

1. All bolted connections shall conform to the RCSC "Specification for Structural Joints Using ASTM A325 or A490 Bolts."
2. Bolts for the floorbeam cable clamps shall be 3/4"ϕ ASTM A490X bolts pre-tensioned to 35 kips. Unless otherwise noted, all remaining bolts are 3/4" ϕ ASTM A325X Type 1 or Type 3 bolts.
3. Bolts for the cable saddles shall be 1"Ø ASTM A490X bolts pretensioned to 64 kips.

STRUCTURAL STEEL FINISH

1. All structural steel shall be galvanized unless otherwise noted on the plans.
2. Surface preparation and finish shall be in accordance with ANSI/AISC 360-05 "Specification for Structural Steel Buildings" sections M2. FABRICATION, M3. SHOP PAINTING and M4. ERECTION.

ROCK ANCHOR CONTRACTOR QUALIFICATIONS

Qualified contractors shall perform the rock anchor fabrication and installation work. The qualified contractor shall have experience installing rock anchors in karstic formations.

SITE CONDITIONS - KARSTIC FORMATION

The north and south anchorages are founded on a karstic formation. Close observation and monitoring by a geotechnical engineer (or engineering technician working under the direction of a geotechnicalengineer) familiar with the subsurface conditions and installation procedures at the site is considered necessary during Rock Anchor installation in order to confirm that the shaft is installed satisfactorily to meet the design intent and criteria.

During drilling, the engineer (or technician) shall perform the following tasks:

1. Confirm the drill holes are within the specified tolerances for location and verticality.
2. Record the diameter and depth of the drill hole.
3. Log and record the soil stratification encountered by the drilling process to confirm that the pile bears in the desired formation.
4. Log and record the extent of clay seams and voids. Discount individual seams and/or soft zones that are six inches or less in length in determining the bond zone length and add an amount equal to the accumulated discounted soft zones to the total length of the bond zone. If individual seams and/or soft zones greater than six inches in length are encountered, begin logging the bond length again, starting at the depth below the seam and/or soft zone where competent rock is again encountered
5. Verify and document the size, number and length of prestressing strand placed in the drill hole.
6. For initial grouting, approve then confirm the gravity grouting procedures.
7. For post-grouting, approve then confirm the pump grouting procedures.
8. Document the amount of grout placed in the pile and compare it to the theoretical volume of the shaft to determine whether a pile neck-down or other discontinuity has occurred.
9. During production rock anchor grouting or re-grouting, form one set of four (4) grout test cylinders per day per rock anchor for laboratory compressive strength testing.
10. Significant deviations from the specified or anticipated conditions shall be promptly reported to the Owner's geotechnical engineer.

ROCK ANCHORS

1. Strand shall be 0.6"ϕ seven wire strand conforming to ASTM A416 Grade 270 A drill hole diameter of 6" and a grout-to-ground bond stress of 45 psi was assumed for the design shown on the plans.
2. Do not load rock anchors for a minimum of 3 days after grouting.
3. Each rock anchor shall be proof-loaded to 328 kips. The lock off load shall be 246 kips.
4. Rock anchors shall be installed at a 3/2 batter and at the skew shown on the plans.
5. Rock anchors shall include centralizers at 10-foot maximum spaces.

ROCK ANCHOR GROUT

1. Use Type I, II or III cement conforming to AASHTO M85.
2. Potable water shall be used for mixing grout.
3. Admixtures may be used subject to approval of the Owner.
4. Rock anchors shall include provisions for post-grouting. Post-grouting injection pressure shall not exceed 870 psi.

CABLE SADDLES

1. Cable saddles shall be built up from plates that are bevel cut to the radius shown on the plans.
2. The bevel cut surfaces that form the trough shall be machined to a finish of 3.2 micrometers.
3. All edges at the ends of the saddle trough shall be ground to a radius of 1/2".
4. The saddle shall be assembled in the shop and checked for misalignments and sharp edges at the trough surface. If found, the misalignments shall be corrected and the sharp edges removed, and if necessary, the trough surfaces re-machined to a finish of 3.2 micrometers.

Seals

STATE OF KENTUCKY KWONG MAN CHENG 28201 LICENSED PROFESSIONAL ENGINEER May 23, 2013

OPAC Consulting Engineers
315 Bay Street, Second Floor
San Francisco, CA 94945
(415)989-4551
www.opacengineers.com

LANDSCAPE ARCHITECT
Wallace Roberts & Todd, LLC
1700 Market Street
28th Floor
Philadelphia, PA 19103
tel 215.732.5215
fax 215.732.2551

Architect
BRAVURA
111 West Washington Street
Louisville, Kentucky 40202
T: (502) 584-0000
F: (502) 584-0829

The Parklands of Floyds Fork, Project 4A
The Strand, Turkey Run Park and Broad Run
Louisville, Kentucky

Owner:
21st Century Parks, Inc.
371 W. Main St., Suite 202
Louisville, Kentucky 40202

REV #	DATE	DESCRIPTION
	05/08/2013	ISSUED FOR BID
1	05/23/2013	ADDENDUM #1: CORRECTIONS AND REVISED HANDRAIL

Job No:	12300.4AC
Date:	May 23, 2013
Scale:	As Noted
Drawn By:	L.Chien

ISSUED FOR ADDENDUM #1

Drawing Title:
Parklands of Floyds Fork
ADD-ALT. NO.1
PROJECT 4A
General Notes

Drawing No:
BR-S702

Index Of Drawings

BR-S701	Title Sheet and Index
BR-S702	General Notes
BR-S703	Plan and Elevation
BR-S704	Cable Workpoint Layout
BR-S705	Foundation Layout
BR-S706	South Anchorage
BR-S707	North Anchorage
BR-S708	Rock Anchor Details
BR-S709	South Cable Bent - 1
BR-S710	South Cable Bent - 2
BR-S711	North Cable Bent - 1
BR-S712	North Cable Bent - 2
BR-S713	Developed Framing Plan - 1
BR-S714	Developed Framing Plan - 2
BR-S715	Typical Framing Segment and Details
BR-S716	Handrail Cable and Details
BR-S717	South Walls and Gangplank - 1
BR-S718	South Walls and Gangplank - 2
BR-S719	North Walls and Gangplank - 1
BR-S720	North Walls and Gangplank - 2

Seals

STATE OF KENTUCKY
KWONG MAN CHENG
26801
LICENSED PROFESSIONAL ENGINEER
May 23, 2013

OPAC Consulting Engineers
315 Bay Street, Second Floor
San Francisco, CA 94945
(415)989-4551
www.opacengineers.com

LANDSCAPE ARCHITECT
WRT
Wallace Roberts & Todd, LLC
1700 Market Street
28th Floor
Philadelphia, PA 19103
tel 215.732.5215
fax 215.732.2551

Architect
BRAVURA
111 West Washington Street
Louisville, Kentucky 40202
T: (502) 584-6000
F: (502) 584-6829

The Parklands of Floyds Fork, Project 4A
The Strand, Turkey Run Park and Broad Run
Louisville, Kentucky

Owner:
21st Century Parks, Inc.
371 W. Main St., Suite 202
Louisville, Kentucky 40202

REV #	DATE	DESCRIPTION
	05/08/2013	ISSUED FOR BID
1	05/23/2013	ADDENDUM #1; CORRECTIONS AND REVISED HANDRAIL

Job No:	12300.4AC
Date:	May 23, 2013
Scale:	As Noted
Drawn By:	L.Chien

ISSUED FOR ADDENDUM #!

Drawing Title:

Parklands of Floyds Fork
ADD-ALT. NO.1
1 PROJECT 4A
Title Sheet and index

Drawing No:

BR-S701

TREES TO SUPPLEMENT ZONE C

Size (acres): 2.7

Overall Minimum Spacing (ft.)	Species Quantity	Vegetation Strata/ Species Name	Common Name	Unit	Spacing Type	Size	Individual Minimum Spacing (ft.)
20		**TREES**					
	24	Acer negundo	Box elder	CON	see plans	4 - 5 ft	see plans
	26	Acer rubrum	Red maple	CON	see plans	4 - 5 ft	see plans
	29	Juglans cineria	Butternut	CON	see plans	4 - 5 ft	see plans
	19	Juglans x bixbyi	Buartnut	CON	see plans	4 - 5 ft	see plans
	5	Pinus strobus	White pine	CON	see plans	4 - 5 ft	see plans
	27	Platanus occidentalis	American sycamore	CON	see plans	4 - 5 ft	see plans
	130	**= total**					
15		**MIDSTORY TREES**					
	87	Asmina triloba	Paw Paw	CON	see plans	4 - 5 ft	see plans
	94	Carpinus caroliniana	Ironwood	CON	see plans	4 - 5 ft	see plans
	108	Celtis laevigata	Sugarberry	CON	see plans	4 - 5 ft	see plans
	90	Cornus florida	Flowering dogwood	CON	see plans	4 - 5 ft	see plans
	39	Rhus typhina	Staghorn sumac	CON	see plans	4 - 5 ft	see plans
	418	**= total**					

CON=container

ZONE A - LIVE BRANCH LAYERING

Length (LF): 1,830

Frequency (%)	Species Quantity	Vegetation Strata/ Species Name	Common Name	Unit	Spacing Type	Size	Individual Minimum Spacing (ft.)
		SHRUBS					
18	5,270	Cephalanthus occidentalis	Common buttonbush	Branch	16/lf	4 - 5 ft (#3)	123
26	7,613	Cornus amomum	Silky dogwood	Branch	16/lf	4 - 5 ft (#3)	102
22	6,442	Cornus sericea	Redosier dogwood	Branch	16/lf	4 - 5 ft (#3)	111
16	4,685	Salix discolor	Pussy willow	Branch	16/lf	4 - 5 ft (#3)	130
18	5,270	Salix interior	Sandbar willow	Branch	16/lf	4 - 5 ft (#3)	123
100	**29,280**	**= total**					
		NATIVE SEED					
20	1.00	Carex vulpinodea	Fox sedge	LB of P.L.S. 76 %	SEED	N/A	N/A
20	1.00	Chasmanthium latifolium	Northern sea oats	LB of P.L.S. 76 %	SEED	N/A	N/A
20	1.00	Dichanthelium clandestinum	Deertongue grass	LB of P.L.S. 76 %	SEED	N/A	N/A
20	1.00	Elymus riparius	Riverbank wild rye	LB of P.L.S. 76 %	SEED	N/A	N/A
20	1.00	Elymus virginicus	Virginia wild rye	LB of P.L.S. 76 %	SEED	N/A	N/A
100	**5.00**	**= total**					

ZONE B - JOINT PLANTINGS

Size (acres): 0.20

Overall Minimum Spacing (ft.)	Quantity per acre	Frequency (%)	Species Quantity	Vegetation Strata/ Species Name	Common Name	Unit	Spacing Type	Size	Individual Minimum Spacing (ft.)
8	681			**SHRUBS**					
		30	41	Cornus amomum	Silky dogwood	CON	Random	3 - 4 ft	15
		35	48	Cornus sericea	Redosier dogwood	CON	Random	3 - 4 ft	13
		15	20	Sambucus canadensis	Elderberry	CON	Random	3 - 4 ft	21
		20	27	Viburnum dentatum	Southern arrowood	CON	Random	3 - 4 ft	18
		100	**136**	**= total**					
N/A	40			**NATIVE SEED**					
		15	1.2	Rudbeckia triloba	Brown-eyed Susan	LB of P.L.S. 76 %	SEED	N/A	N/A
		10	0.8	Carex vulpinodea	Fox sedge	LB of P.L.S. 76 %	SEED	N/A	N/A
		10	0.8	Dichanthelium clandestinum	Deertongue grass	LB of P.L.S. 76 %	SEED	N/A	N/A
		20	1.6	Elymus riparius	Riverbank wild rye	LB of P.L.S. 76 %	SEED	N/A	N/A
		20	1.6	Elymus virginicus	Virginia wild rye	LB of P.L.S. 76 %	SEED	N/A	N/A
		5	0.4	Lobelia cardinalis	Cardinal flower	LB of P.L.S. 76 %	SEED	N/A	N/A
		15	1.2	Panicum virgatum	Switchgrass	LB of P.L.S. 76 %	SEED	N/A	N/A
		5	0.4	Verbesina hastata	Blue vervain	LB of P.L.S. 76 %	SEED	N/A	N/A
		100	**8**	**= total**					

CON=container

ZONE C - RIPARIAN SHRUB

Size (acres): 2.7

Overall Minimum Spacing (ft.)	Quantity per acre	Frequency (%)	Species Quantity	Vegetation Strata/ Species Name	Common Name	Unit	Spacing Type	Size	Individual Minimum Spacing (ft.)
12	303			**SHRUBS and VINES**					
		10	82	Alnus serrulata	Smooth alder	CON	Random	3 - 4 ft	38
		5	41	Itea virginica	Virginia sweetspire	CON	Random	3 - 4 ft	54
		10	82	Lindera benzoin	Spicebush	CON	Random	3 - 4 ft	38
		15	123	Hamamelis virginiana	Witchhazel	CON	Random	3 - 4 ft	31
		10	82	Parthenocissus quinquefolia	Virginia creeper	CON	Random	3 - 4 ft	38
		5	41	Photinia melanocarpa	Black chokeberry	CON	Random	3 - 4 ft	54
		15	123	Sambucus canadensis	Elderberry	CON	Random	3 - 4 ft	31
		15	123	Viburnum acerifolium	Mapleleaf viburnum	CON	Random	3 - 4 ft	31
		15	123	Viburnum dentatum	Southern arrowood	CON	Random	3 - 4 ft	31
		100	**820**	**= total**					
N/A	40			**NATIVE SEED**					
		15	16.2	Rudbeckia triloba	Brown-eyed Susan	LB of P.L.S. 76 %	SEED	N/A	N/A
		10	10.8	Carex vulpinodea	Fox sedge	LB of P.L.S. 76 %	SEED	N/A	N/A
		10	10.8	Dichanthelium clandestinum	Deertongue grass	LB of P.L.S. 76 %	SEED	N/A	N/A
		20	21.6	Elymus riparius	Riverbank wild rye	LB of P.L.S. 76 %	SEED	N/A	N/A
		20	21.6	Elymus virginicus	Virginia wild rye	LB of P.L.S. 76 %	SEED	N/A	N/A
		5	5.4	Lobelia cardinalis	Cardinal flower	LB of P.L.S. 76 %	SEED	N/A	N/A
		15	16.2	Panicum virgatum	Switchgrass	LB of P.L.S. 76 %	SEED	N/A	N/A
		5	5.4	Verbesina hastata	Blue vervain	LB of P.L.S. 76 %	SEED	N/A	N/A
		100	**108**	**= total**					

CON=container

ZONE D - LIVE STAKING

Length (LF): 470

Frequency (%)	Species Quantity	Vegetation Strata/ Species Name	Common Name	Unit	Spacing Type	Size	Individual Minimum Spacing (ft.)
		SHRUBS					
18	42	Cephalanthus occidentalis	Common buttonbush	Stake	2-ft centers	2 - 3 ft	11
26	61	Cornus amomum	Silky dogwood	Stake	2-ft centers	2 - 3 ft	8
22	52	Cornus sericea	Redosier dogwood	Stake	2-ft centers	2 - 3 ft	9
16	38	Salix discolor	Pussy willow	Stake	2-ft centers	2 - 3 ft	12
18	42	Salix interior	Sandbar willow	Stake	2-ft centers	2 - 3 ft	11
100	**235**	**= total**					
		NATIVE SEED					
20	0.30	Carex vulpinodea	Fox sedge	LB of P.L.S. 76 %	SEED	N/A	N/A
20	0.30	Chasmanthium latifolium	Northern sea oats	LB of P.L.S. 76 %	SEED	N/A	N/A
20	0.30	Dichanthelium clandestinum	Deertongue grass	LB of P.L.S. 76 %	SEED	N/A	N/A
20	0.30	Elymus riparius	Riverbank wild rye	LB of P.L.S. 76 %	SEED	N/A	N/A
20	0.30	Elymus virginicus	Virginia wild rye	LB of P.L.S. 76 %	SEED	N/A	N/A
100	**1.50**	**= total**					

ZONE E - MOWN LAWN SOD MIX

Size (acres): 0.55

Frequency (%)	Common Name
30	Dynamic tall fescue
30	Matador G.I. tall fescue
30	Apache III tall fescue
3.33	Therman Blue Kentucky bluegrass
3.33	Abbey Kentucky bluegrass
3.34	Jump Start Kentucky bluegrass
100	= total

NOTES:

PLANTING SCHEDULES REFER TO PLANTING ZONES AS DEPICTED ON THE BIOENGINEERING AND PLANTING PLANS, DRAWINGS BE-101 THROUGH BE-109.

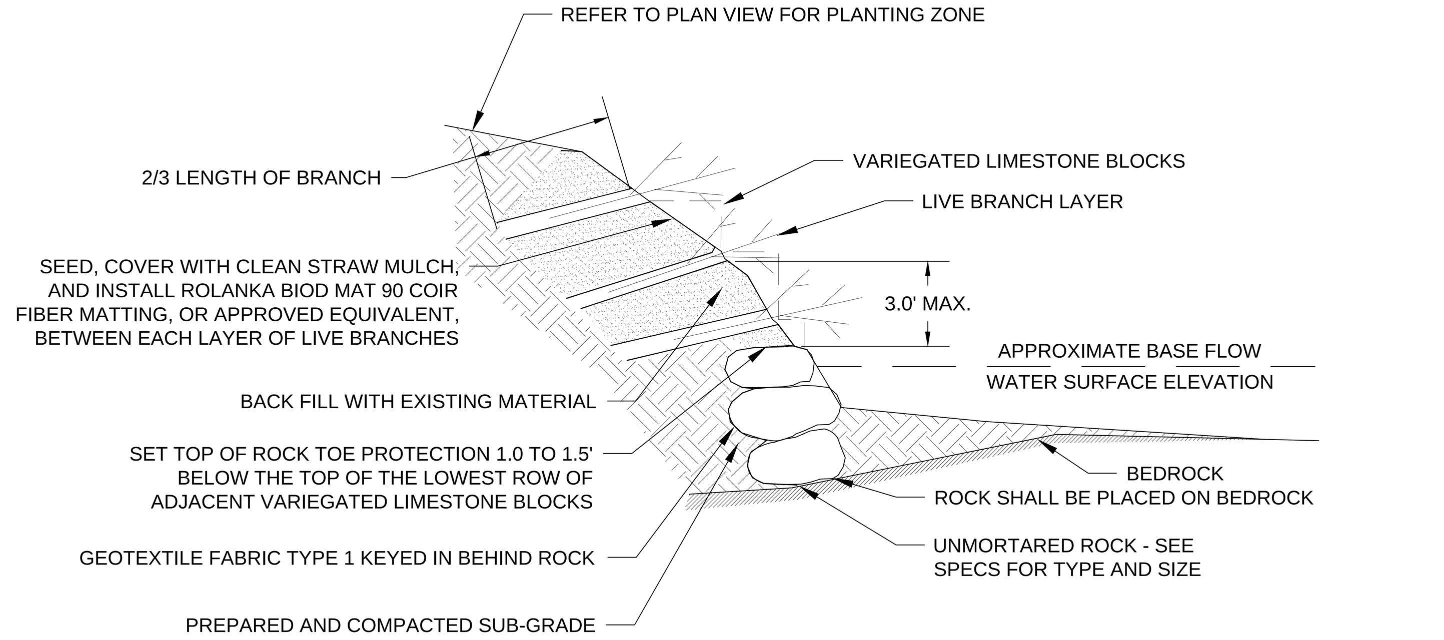

NOTES:
1. THE SLOPE OF THE BANK WITH LIVE BRANCH LAYERING SHALL BE FLATTER THAN 1:1. GRADE BACK STEEPER BANKS AS NECESSARY.
2. COIR FIBER MATTING SHALL BE KEYED IN MIN. OF 1.0' AT THE TOP OF THE SLOPE AND KEYED IN BEHIND ROCK TOE PROTECTION.
3. REFER TO THE BIOENGINEERING AND PLANTING PLAN DRAWING # BE-101 THROUGH BE-109, FOR LOCATION OF LIVE BRANCH LAYERING PLANTING ZONE.
4. SEE TECHNICAL SPECIFICATIONS 329400 AND 329401 FOR DETAILED INSTRUCTIONS FOR CONSTRUCTING ROCK TOE WITH LIVE BRANCH LAYERING.

ROCK TOE PROTECTION WITH LIVE BRANCH LAYERING
CROSS SECTION

NOT TO SCALE

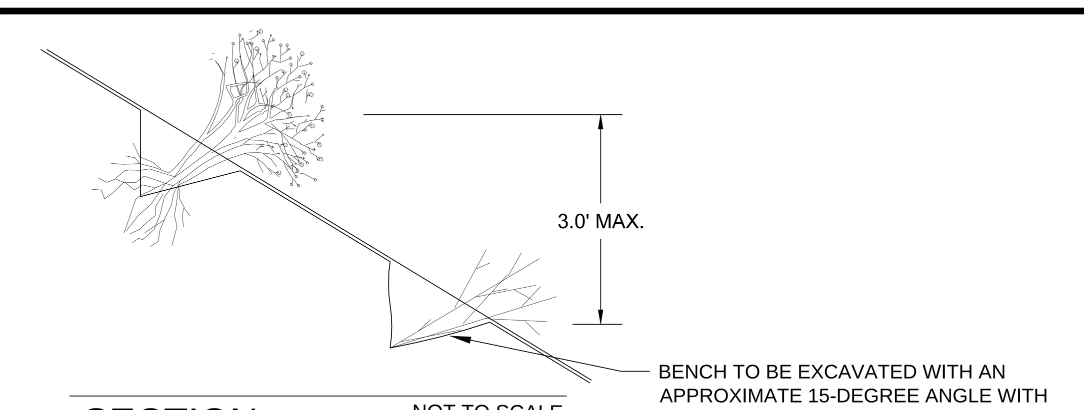

SECTION

NOT TO SCALE

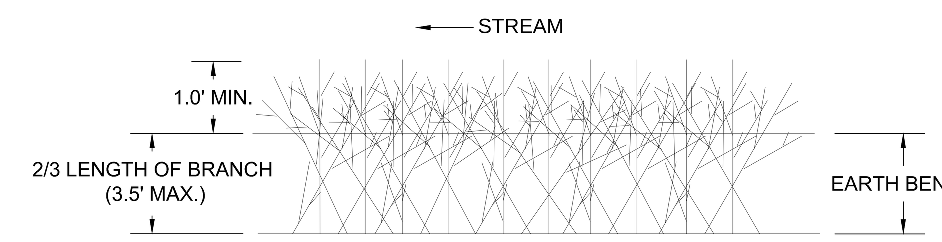

NOTE: PLACE A 3-INCH LAYER WITH A MINIMUM OF 16 LIVE BRANCHES PER LINEAR FOOT. PLACE LIVE BRANCHES EVENLY ACROSS BENCH IN A CRISS-CROSS CONFIGURATION.

LIVE BRANCH LAYERING
PLAN VIEW

NOT TO SCALE

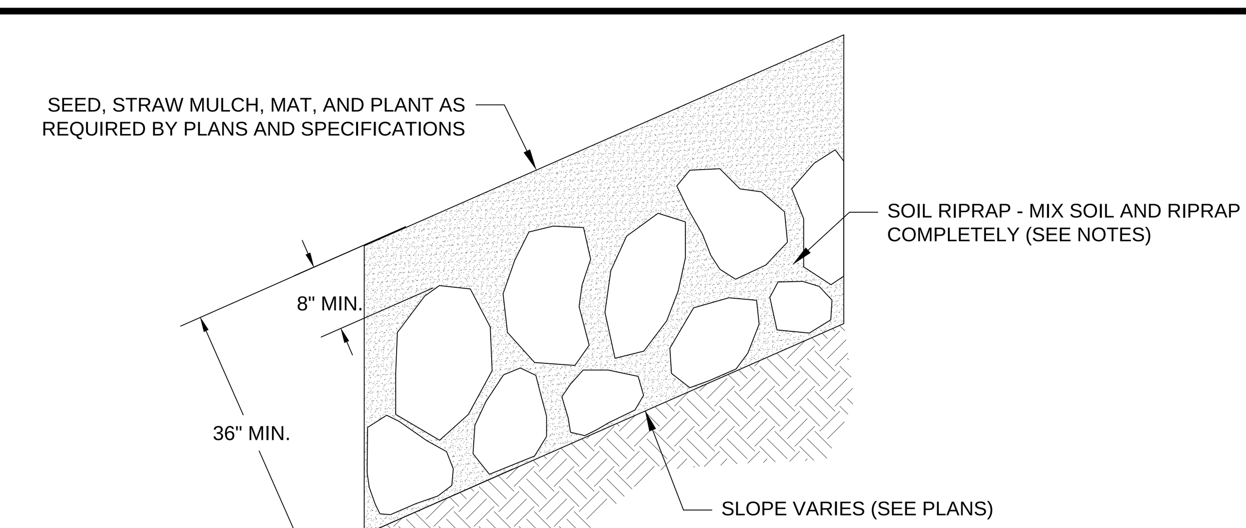

NOTES:
1. USE SOIL RIPRAP FOR ALL RIPRAP PLACED WITHIN A PLANTING ZONE. REFER TO BIOENGINEERING AND PLANTING PLAN, DRAWING # BE-101 THROUGH BE-109.
2. MIX UNIFORMALLY 65% RIPRAP BY VOLUME WITH 35% OF APPROVED SOIL BY VOLUME PRIOR TO PLACEMENT.
3. PLACE STONE-SOIL MIX TO RESULT IN SECURELY INTERLOCKED ROCK AT A MINIMIUM OF 36-INCH THICKNESS. COMPACT AND LEVEL TO ELIMINATE ALL VOIDS AND PROJECTING ROCKS.
4. DURING PLACEMENT OF SOIL RIPRAP, LEAVE VOIDS FOR INSTALLATION OF PLANTS. REFER TO APPLICABLE DETAILS ON THIS SHEET.
5. BURY SOIL RIPRAP WITH A MIN. OF 8" OF APPROVED SOIL.
6. SEE TECHNICAL SPECIFICATION 329402 FOR DETAILED INSTRUCTIONS ON CONSTRUCTING BURIED SOIL RIPRAP.

BURIED SOIL RIPRAP
SECTION - TYPICAL

NOT TO SCALE

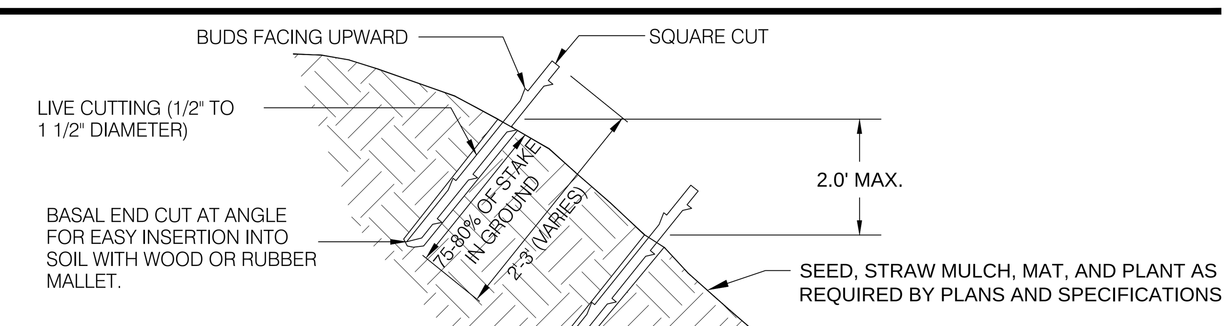

NOTES:
1. REFER TO THE BIOENGINEERING AND PLANTING PLAN DRAWING # BE-101 TO BE-109.
2. HARVEST/PURCHASE AND INSTALL LIVE STAKES, AS SPECIFIED FOR ZONE D - LIVE STAKING, DURING THE FIRST DORMANT SEASON (EARLY DECEMBER TO LATE FEBRUARY).
3. USE LIVE, HEALTHY, AND STRAIGHT WOOD STAKES. STAKES SHOULD BE BETWEEN 2 AND 3 FEET LONG AND ½ INCH TO 1½ INCH IN DIAMETER.
4. MAKE CLEAN CUTS. TOP CUTS SHOULD BE SQUARE CUT AND THE BASAL END SHOULD BE POINTED OR ANGLED.
5. LIVE STAKES ARE TO BE INSTALLED THROUGH THE EROSION CONTROL MAT ALONG THE RESTORED STREAMBANK . LIVE STAKES WILL BE INSTALLED ON 2-FOOT CENTERS STARTING AT ONE FOOT ABOVE THE TOE OF SLOPE IN THE STREAM CHANNEL.
6. STAKES SHOULD BE INSTALLED UP TO 75% - 80% OF ITS LENGTH INTO THE GROUND. BE CAREFUL NOT TO DAMAGE STAKES OR SPLIT ENDS DURING INSTALLATION. (MAKE A PILOT HOLE IN FIRM SOILS PRIOR TO PLANTING STAKES.) IF DAMAGED DURING INSTALLATION, THE TOP END OF THE LIVE STAKES SHOULD BE CUT FLAT.
7. TAMP THE SOIL AROUND THE INSTALLED STAKE.
8. SEE TECHNICAL SPECIFICATION 329404 FOR DETAILED INSTALLATION INSTRUCTIONS FOR LIVE STAKING.

LIVE STAKING
SECTION - TYPICAL

NOT TO SCALE

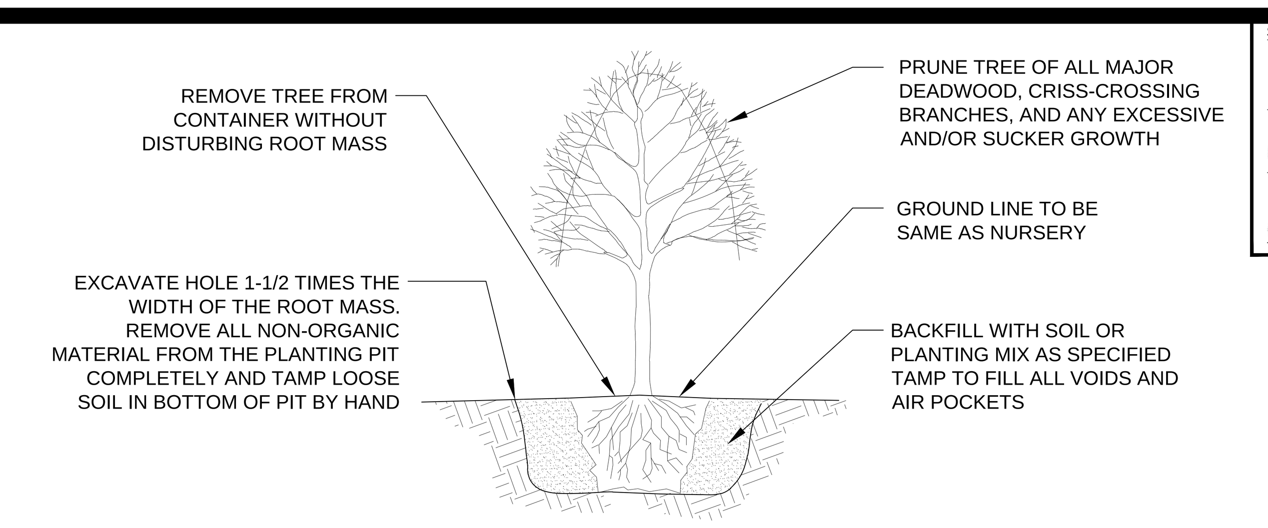

TREE PLANTING - CONTAINER GROWN

NOT TO SCALE

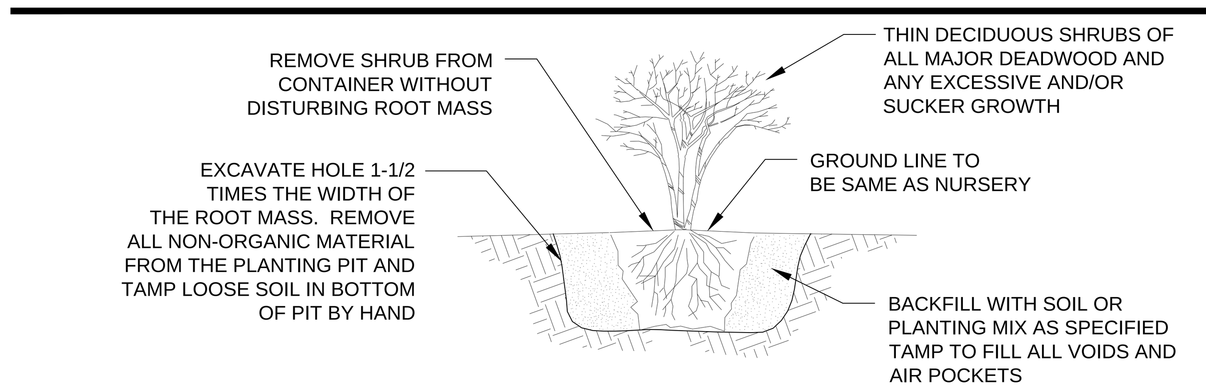

SHRUB PLANTING - CONTAINER GROWN

NOT TO SCALE

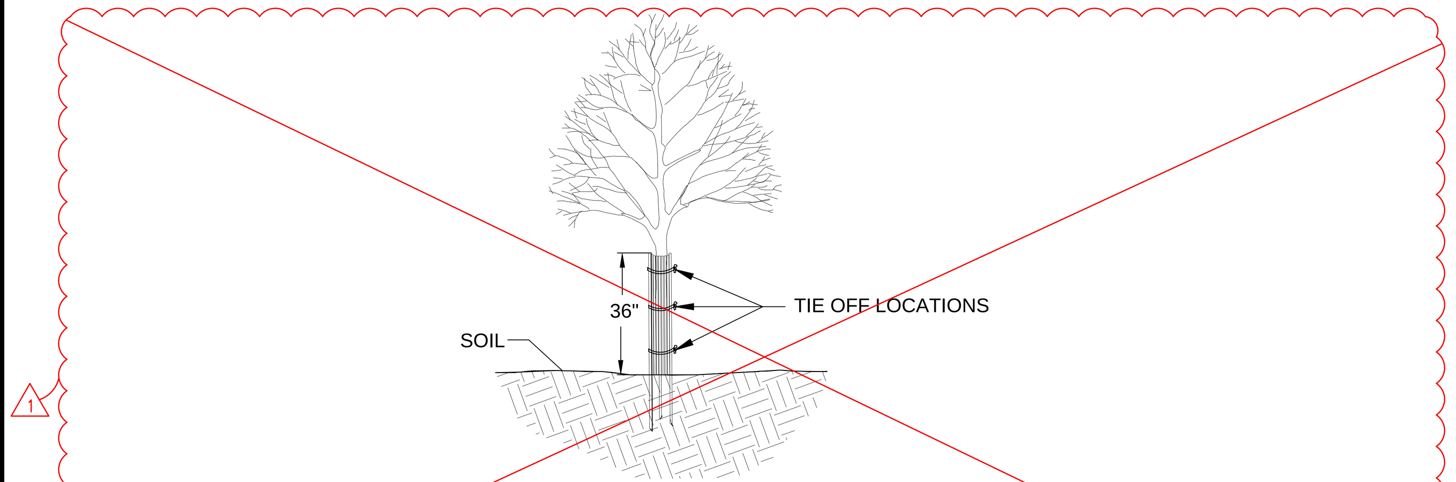

INSTALLATION INSTRUCTIONS:
PLANT TREE ACCORDING TO STANDARD SPECIFICATION
PLACE THE SHELTER AROUND THE TREE
DRIVE LONGER STAKES INTO THE GROUND
TIE OFF ROPE ENDS AROUND TREE

PRODUCT NOTES:
TREE SHELTER MUST BE MADE OF 100% BIODEGRADABLE MATERIALS, HARDWOOD SLATS WOVEN TOGETHER WITH NATURAL ROPE, AND HAVE LONGER, HARDY STAKES FOR INSERTION INTO GROUND TO PROVIDE SUPPORT

BIODEGRADABLE TREE SHELTER

NOT TO SCALE

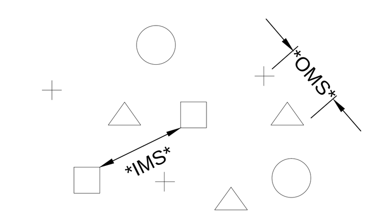

OMS- AN OVERALL MINIMUM SPACING DISTANCE *OMS* IS ASSIGNED TO THE PLANTING CONFIGURATION *SEE PLANT SCHEDULE*
IMS- AN INDIVIDUAL MINIMUM SPACING DISTANCES *IMS* IS ASSIGNED TO EACH INDIVIDUAL SPECIES *SEE PLANT SCHEDULE*

PLANT SPACING - RANDOM
PLAN VIEW

NOTE: EACH SYMBOL INDICATES A DIFFERENT SPECIES

NOT TO SCALE

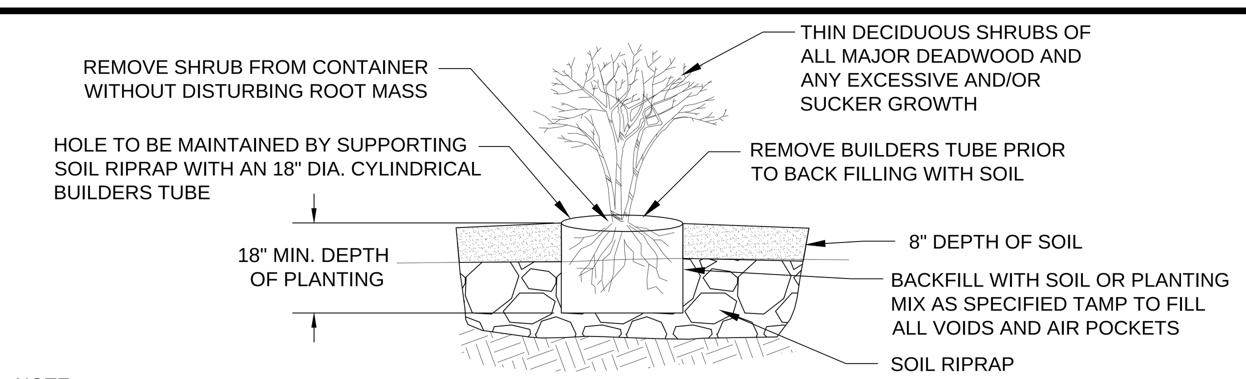

NOTE:
1. INSTALL BUILDERS TUBE DURING PLACEMENT OF SOIL RIP RAP TO ENSURE A MIN. 18" PLANTING DEPTH.
2. BUILDERS TUBE PLACEMENT IS BASED ON PLANT SPACING DESCRIBED IN APPLICABLE DETAILS AND PLANTING SCHEDULE ON THIS SHEET.

JOINT PLANTING

NOT TO SCALE

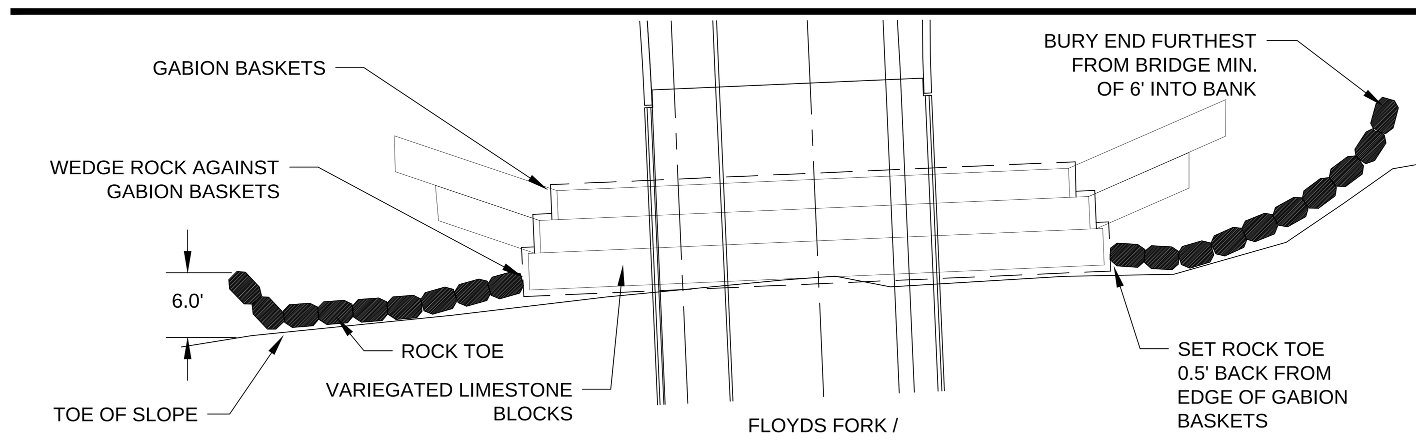

NOTES:
1. BOTTOM OF ROCK TOE PROTECTION SITS ON BEDROCK.
2. ELEVATION OF THE TOP OF ROCK TOE PROTECTION IS 1.0 TO 1.5' BELOW THE ELEVATION OF THE TOP OF THE LOWEST ROW OF VARIEGATED LIMESTONE BLOCK.
3. STACK ROCKS AS NECESSARY TO REACH THE APPROPRIATE ELEVATION FOR THE TOP OF THE ROCK TOE PROTECTION.
4. ROCKS SHOULD NOT SIT DIRECTLY ON TOP OF THE ROCKS BELOW. ROCKS SHOULD BE STAGGERED.
5. LENGTH OF ROCK TOE PROTECTION VARIES. SEE SHEETS BE-101 THROUGH BE-109 FOR LENGTHS.
6. SEE TECHNICAL SPECIFICATION 329401 FOR DETAILED INSTRUCTIONS ON CONSTRUCTING ROCK TOE PROTECTION.

ROCK TOE PROTECTION
PLAN -TYPICAL

NOT TO SCALE

Seals
REDWING ECOLOGICAL SERVICES, INC.
LANDSCAPE ARCHITECT
Wallace Roberts & Todd, LLC
1700 Market Street
28th Floor
Philadelphia, PA 19103
tel 215.732.5215
fax 215.732.2551
Architect
BRAVURA
111 West Washington Street
Louisville, Kentucky 40202
T: (502) 584-9900
F: (502) 584-0829

The Parklands of Floyds Fork, Project 4A
The Strand, Turkey Run Park and Broad Run
Louisville, Kentucky

Owner:
21st Century Parks, Inc.
371 W. Main St., Suite 202
Louisville, Kentucky 40202

REV #	DATE	DESCRIPTION
	5-8-2013	ISSUED FOR BID
1	5-23-2013	ADDENDUM #1: ELIMINATED TREE SHELTER REQUIREMENT

Job No:	12300.4AC
Date:	May 8, 2013
Scale:	No Scale
Drawn By:	JMR
Checked By:	BMA

Drawing Title:
Parklands of Floyds Fork

Project 4A
Bioengineering and Planting Details

Drawing No:
BE-110

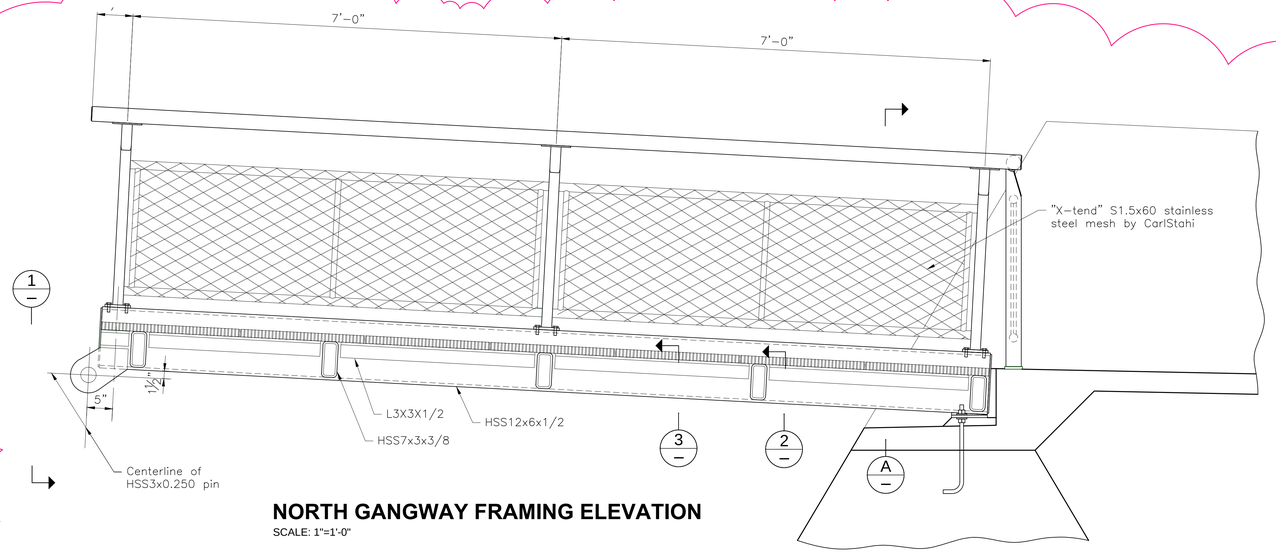

NORTH GANGWAY FRAMING ELEVATION

SCALE: 1"=1'-0"

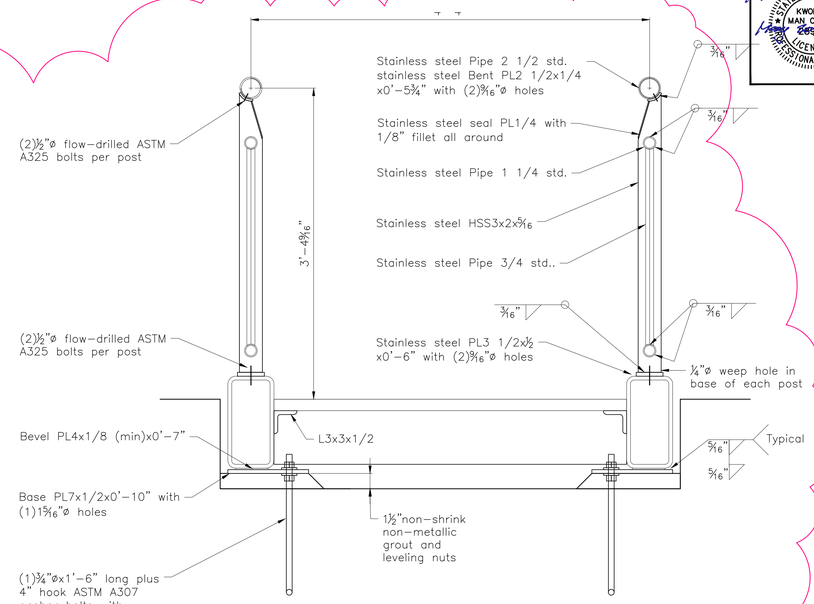

NORTH GANGWAY SECTION

SCALE: 1 1/2"=1'-0"

A

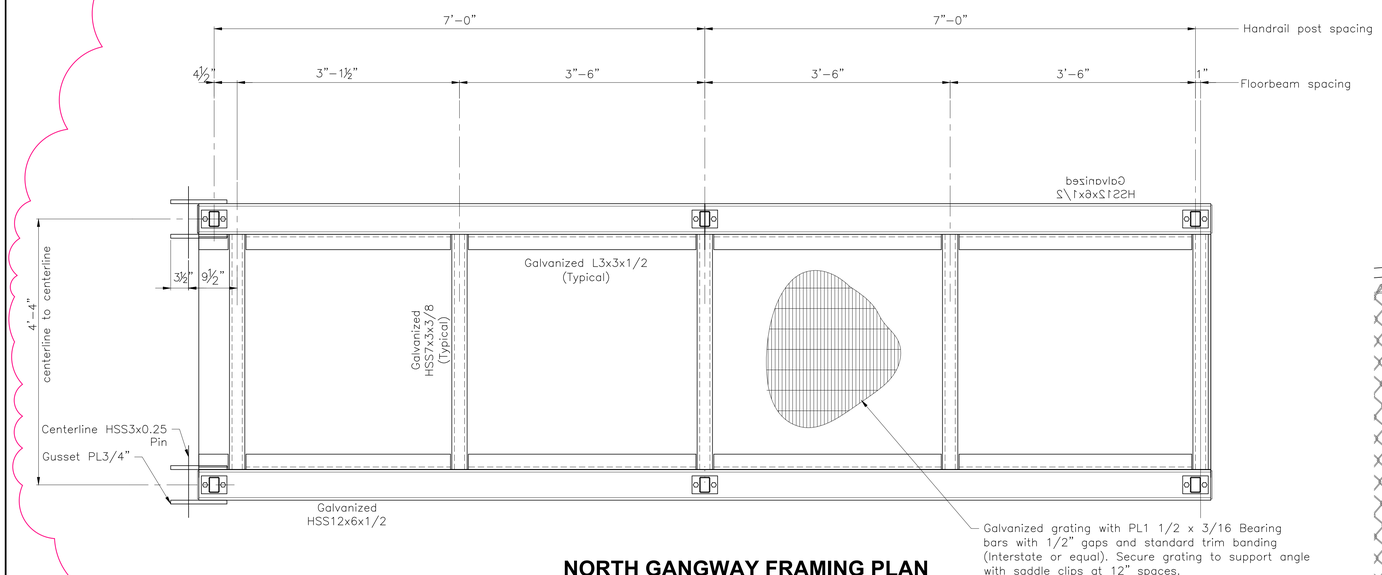

NORTH GANGWAY FRAMING PLAN

SCALE: 1"=1'-0"

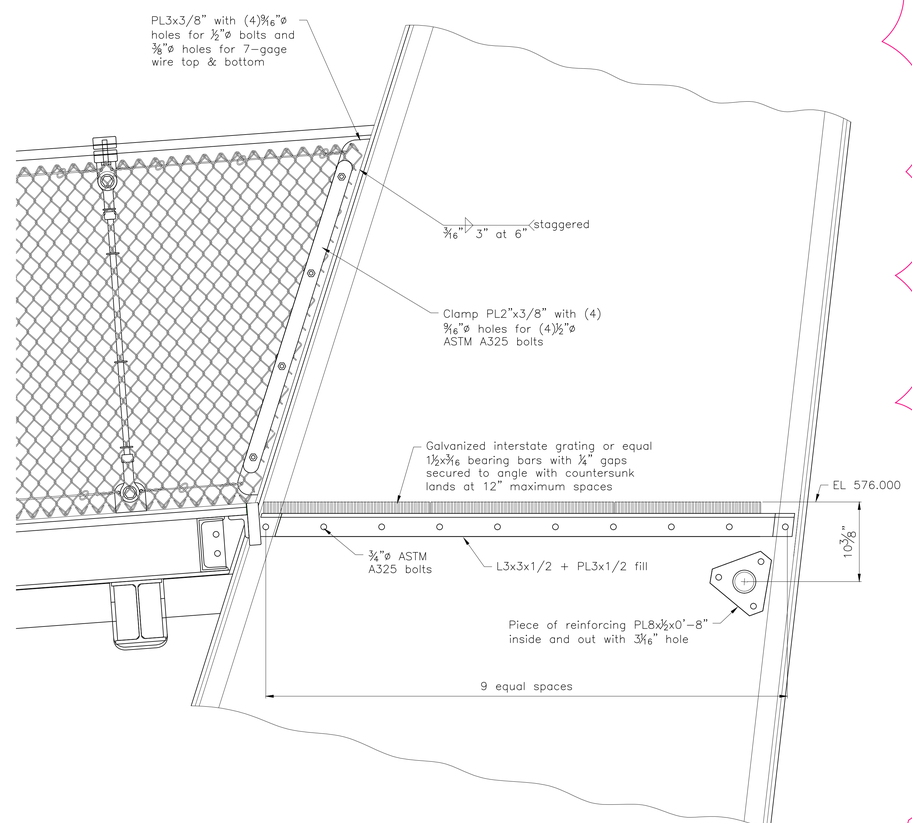

NORTH ARMATURE LANDING SECTION

SCALE: 1 1/2"=1'-0"

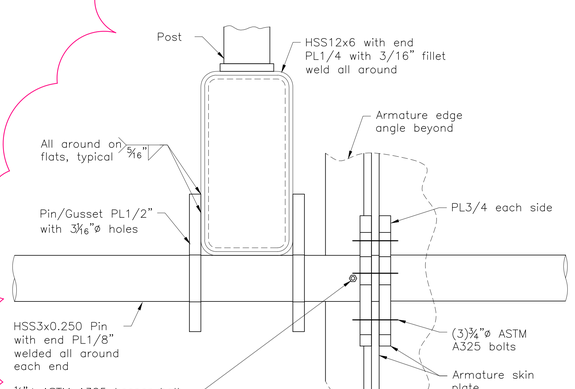

DETAIL 1

SCALE: 3"=1'-0'

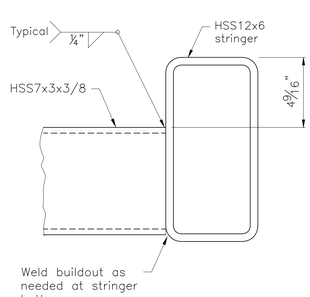

DETAIL 2

SCALE: 3"=1'-0'

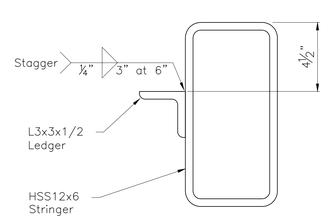

DETAIL 3

SCALE: 3"=1'-0'

NOTE:

For details not shown, use similar details from BR-S718.

OPAC Consulting Engineers
315 Bay Street, Second Floor
San Francisco, CA 94945
(415)989-4551
www.opacengineers.com

LANDSCAPE ARCHITECT
Wallace Roberts & Todd, LLC
1700 Market Street
28th Floor
Philadelphia, PA 19103
tel 215.732.5215
fax 215.732.2551

Architect
BRAVURA
111 West Washington Street
Louisville, Kentucky 40202
T: (502) 584-0000
F: (502) 584-0829

The Parklands of Floyds Fork, Project 4A

The Strand, Turkey Run Park and Broad Run
Louisville, Kentucky

Owner:
21st Century Parks, Inc.
371 W. Main St., Suite 202
Louisville, Kentucky 40202

REV #	DATE	DESCRIPTION
	06/08/2013	ISSUED FOR BID
1	05/23/2013	ADDENDUM #1, CORRECTIONS AND REVISED HANDRAIL

Job No:	12300.4AC
Date:	May 23, 2013
Scale:	As Noted
Drawn By:	L.Chien

ISSUED FOR ADDENDUM #1

Drawing Title:
Parklands of Floyds Fork
ADD-ALT. NO.1
PROJECT 4A
North Walls and Gangplank - 2

Drawing No:
BR-S720

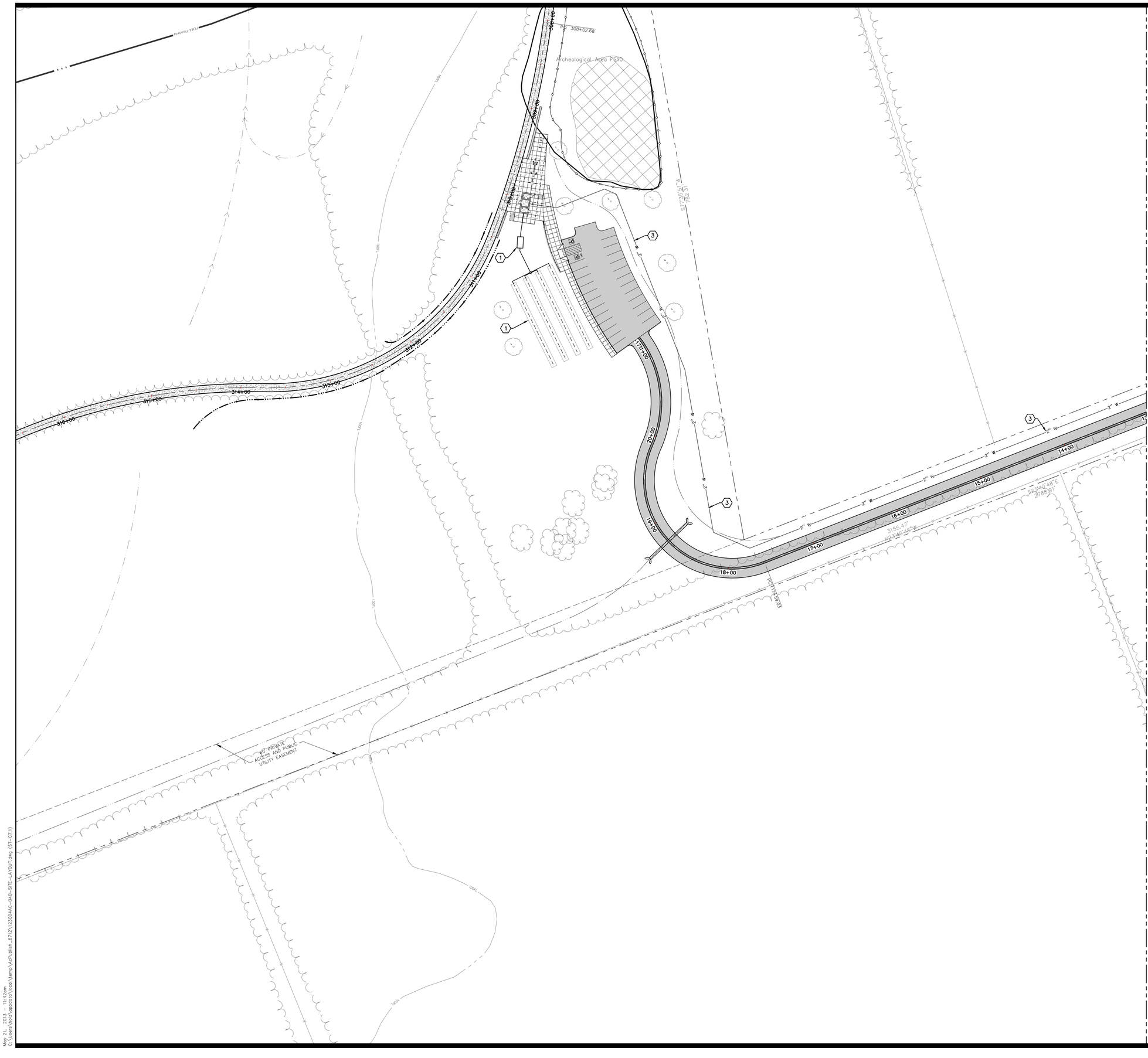

Seals

STATE OF KENTUCKY
ROBERT D. MARTIN
15958
LICENSED
PROFESSIONAL ENGINEER

Robert D. Martin 5/8/13

KEYNOTES (not all keynotes used this sheet)

1. SEPTIC TANK, PUMP TANK AND LATERAL FIELD SHALL ALL BE DESIGNED BY THE CONTRACTOR THROUGH COORDINATION WITH THE METRO HEALTH DEPARTMENT. CONTRACTOR SHALL SUBMIT FINAL DESIGN TO THE OWNER'S ENGINEER FOR APPROVAL PRIOR TO ANY CONSTRUCTION. FOR BIDDING PURPOSES, ASSUME THAT THE SEPTIC SYSTEM SHALL CONSIST OF COMPONENTS, AND SIZE REQUIREMENTS AS OUTLINED IN "SEPTIC SYSTEM SPECIFICATIONS AND NOTES", THIS SHEET.
2. CONTRACTOR SHALL COORDINATE WITH THE LOUISVILLE WATER COMPANY FOR INSTALLATION OF A 2" WATER METER AND PIT (3" METER FOR SILO CENTER ONLY). COORDINATE THE EXACT LOCATION OF WATER METER WITH THE LOUISVILLE WATER COMPANY.
3. CONTRACTOR SHALL INSTALL 2" SCH.40 PVC WATER LINE FROM WATER METER TO LOCATION INDICATED ON PLAN. INSTALL WATER LINE PER DETAIL 3, SHEET 9.2 AND IN ACCORDANCE WITH LOUISVILLE WATER COMPANY STANDARDS AND PLUMBING CODE. CONTRACTOR SHALL WORK WITH OWNER TO FACILITATE THE ORDERING OF NEW WATER SERVICE.
4. EXISTING 12" WATER MAIN SHALL BE RELOCATED AS INDICATED ON PLAN. CONTRACTOR SHALL BE RESPONSIBLE FOR LABOR AND TESTING COSTS ONLY; COST OF LWC DESIGN, MATERIALS AND INSPECTION SHALL BE THE RESPONSIBILITY OF 21CP. INSTALLATION SHALL BE PERFORMED IN ACCORDANCE WITH LOUISVILLE WATER COMPANY STANDARDS.
5. CONTRACTOR SHALL INSTALL 3" SCH.40 PVC WATER LINE WHERE INDICATED ON PLAN. INSTALL WATER LINE PER DETAIL 3, SHEET C9.2 AND IN ACCORDANCE WITH LOUISVILLE WATER COMPANY STANDARDS AND PLUMBING CODE. INSTALL THRUST BLOCKS PER DETAIL 4, SHEET C9.2.
6. CONTRACTOR SHALL INSTALL 2" SCH.40 PVC WATER IRRIGATION SUPPLY LINE TO LIMITS INDICATED ON PLAN. INSTALL PER DETAIL 3, SHEET C9.2 AND IN ACCORDANCE WITH LOUISVILLE WATER COMPANY STANDARDS.
7. CONTRACTOR SHALL INSTALL BALL VALVE, VALVE BOX AND CAP AT PIPE TERMINUS WHERE INDICATED ON PLAN.

GENERAL NOTES

A. ALL CONSTRUCTION RELATING TO WATERLINES SHALL BE INSTALL IN ACCORDANCE WITH LOUISVILLE WATER COMPANY STANDARDS AND APPLICABLE PLUMBING CODE(S).

B. CONTRACTOR SHALL COORDINATE WITH THE LOUISVILLE WATER COMPANY AND EITHER METRO PUBLIC WORKS OR THE KENTUCKY DEPARTMENT OF TRANSPORTATION (AS REQUIRED) FOR REQUIREMENTS AND ALL WORK RELATED TO THE INSTALLATION OF WATER SERVICE LINES REQUIRING THE CROSSING OF EXISTING ROADWAYS.

C. CONTRACTOR SHALL BE RESPONSIBLE FOR PAYING ALL APPLICABLE TAP FEES, METER FEES AND SYSTEM DEVELOPMENT FEES.

D. ALL UNDERGROUND PRESSURE PIPING SHALL HAVE FLEXIBLE JOINTS SUCH AS MECHANICAL JOINTS OR PUSH-ON.

E. ALL BENDS AND TERMINUSES OF UNDERGROUND PRESSURE PIPING SHALL HAVE EITHER RESTRAINED JOINTS OR THRUST BLOCKS.

F. COORDINATE ELECTRICAL SERVICE WITH "E5" SERIES ELECTRICAL PLANS.

SEPTIC SYSTEM SPECIFICATIONS AND NOTES

A. CERTIFIED INSTALLER MUST OBTAIN AN INSTALLATION PERMIT FROM THE METRO HEALTH DEPARTMENT ($405).

B. 1,250 GALLON CAPACITY PRECAST CONCRETE SEPTIC TANK (KENTUCKY STATE APPROVED).

C. RISER AND LID FOR GROUND LEVEL ACCESS ON SEPTIC TANK INLET AND OUTLET ENDS.

D. 1,250 GALLON CAPACITY PRECAST CONCRETE PUMP TANK (KENTUCKY STATE APPROVED).

E. RISER AND LID FOR GROUND LEVEL ACCESS ON PUMP TANK.

F. EFFLUENT PUMP 1/2 HP (115 VOLT INSTALLED ON A DEDICATED 20 AMP BREAKER).

G. HIGH WATER ALARM (SEPERATE LOW VOLTAGE CIRCUIT) LOCATION TO BE DETERMINED BY PROJECT ARCHITECT.

H. BACKFILL AROUND SEPTIC TANK AND PUMP TANK WITH JETTED LIMESTONE SAND TO ENSURE WATER TIGHTNESS.

I. COORDINATE WITH PLUMBING AND ELECTRICAL SHEETS FOR PUMP AND HIGH LEVEL ALARM RELATED INFORMATION.

J. ALL GRAVITY PIPING SHALL BE 4" SCH. 40 PVC.

K. SUPPLY LINE TO HAVE #10 COPPER GROUND WIRE INSTALLED DIRECTLY ABOVE PIPE FOR FUTURE LOCATING PURPOSES.

L. LATERAL FIELD SHALL BE 230 FEET IN LENGTH x 6' WIDE LEACHING CHAMBER BEDS INSTALLED 20 INCHES IN DEPTH.

M. INSTALL DISTRIBUTION BOX AS REQUIRED.

N. PROVIDE VERTICAL CLEANOUTS TO FACILITATE SYSTEM MAINTENANCE.

O. AREA OF TANKS AND LATERAL FIELD SHALL BE FINISHED GRADED AFTER SETTLEMENT IN COMPLETE.

P. AREA OF TANKS AND LATERAL FIELD SHALL BE PROTECTED FROM EQUIPMENT, VEHICLES, MATERIAL STORAGE, ETC.

0 40' 80'

Engineering
Planning
1046 East Chestnut Street, Louisville, Kentucky 40204
Phone: 502.584.9900 Fax: 502.584.0829
Kentucky • Indiana • Georgia • Tennessee • Florida

LANDSCAPE ARCHITECT
WRT
Wallace Roberts & Todd, LLC
1700 Market Street
28th Floor
Philadelphia, PA 19103
tel 215.732.5215
fax 215.732.2551

Architect
BRAVURA
111 West Washington Street
Louisville, Kentucky 40202
T: (502) 584-9900
F: (502) 584-0829

The Parklands of Floyds Fork, Project 4A

The Strand, Turkey Run Park and Broad Run
Louisville, Kentucky

Owner:
21st Century Parks, Inc.
371 W. Main St., Suite 202
Louisville, Kentucky 40202

REV #	DATE	DESCRIPTION
1	05-23-2013	Revised septic system specification

Job No:	12300.4AC
Date:	May 8, 2013
Scale:	1" = 40'
Drawn By:	

BID SET

Drawing Title:

Parklands of Floyds Fork

The Strand
PROJECT 4A
Trail Head
Utilities

Drawing No:

ST-C7.1

May 21, 2013 – 11:42am
C:\Users\hoxt.dapsoft\Hoxt\temp\AcPublish_6772\12300AC-C40-STE-LAYOUT.dwg (ST-C7.1)

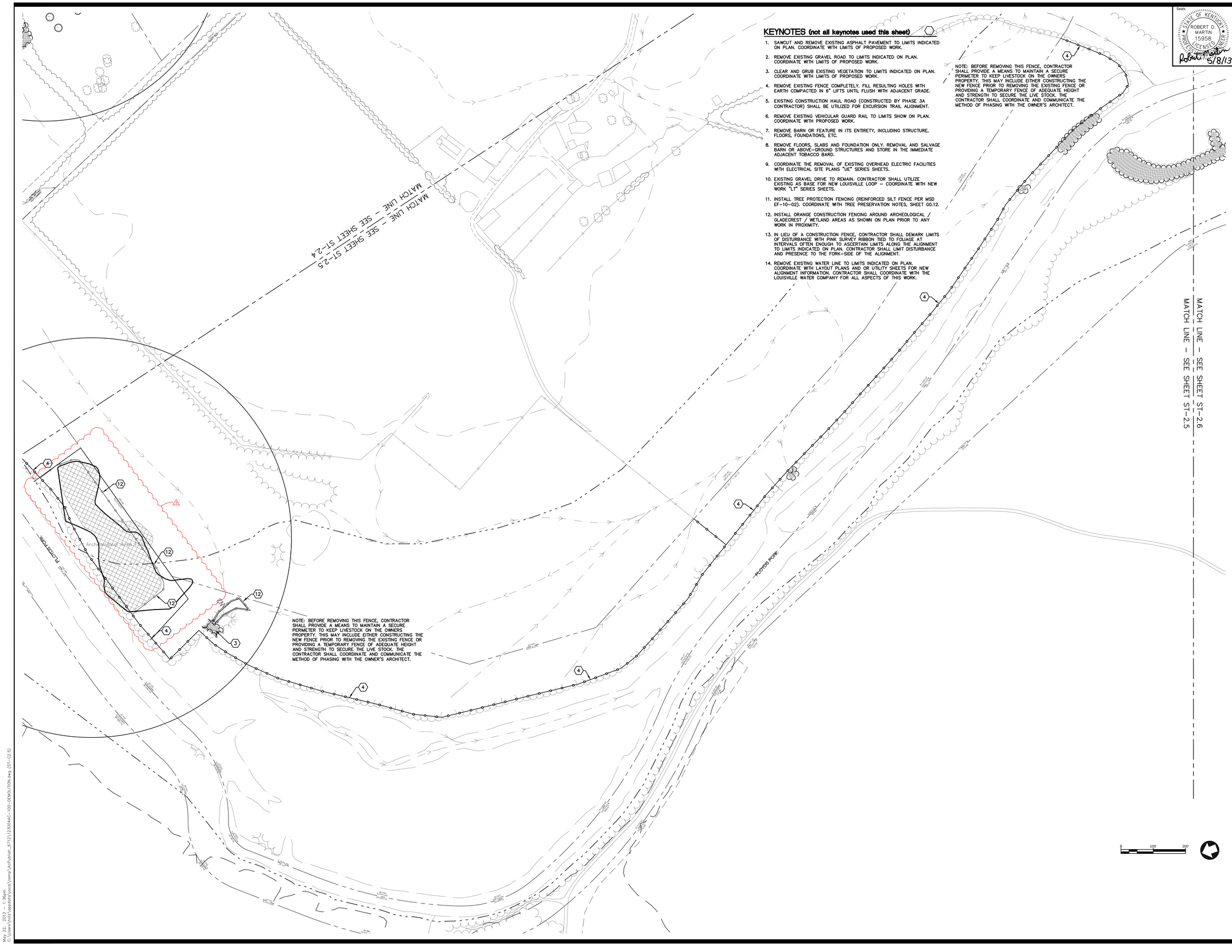

KEYNOTES (not all keynotes used this sheet)

1. SAWCUT AND REMOVE EXISTING ASPHALT PAVEMENT TO LIMITS INDICATED ON PLAN. COORDINATE WITH LIMITS OF PROPOSED WORK.
2. REMOVE EXISTING GRAVEL ROAD TO LIMITS INDICATED ON PLAN. COORDINATE WITH LIMITS OF PROPOSED WORK.
3. CLEAR AND GRUB EXISTING VEGETATION TO LIMITS INDICATED ON PLAN. COORDINATE WITH LIMITS OF PROPOSED WORK.
4. REMOVE EXISTING FENCE COMPLETELY. FILL RESULTING HOLES WITH EARTH COMPACTED IN 6" LIFTS UNTIL FLUSH WITH ADJACENT GRADE.
5. EXISTING CONSTRUCTION HAUL ROAD (CONSTRUCTED BY PHASE 3A CONTRACTOR) SHALL BE UTILIZED FOR EXCURSION TRAIL ALIGNMENT.
6. REMOVE EXISTING VEHICULAR GUARD RAIL TO LIMITS SHOW ON PLAN. COORDINATE WITH PROPOSED WORK.
7. REMOVE BARN OR FEATURE IN ITS ENTIRETY, INCLUDING STRUCTURE, FLOORS, FOUNDATIONS, ETC.
8. REMOVE FLOORS, SLABS AND FOUNDATION ONLY. REMOVAL AND SALVAGE BARN OR ABOVE-GROUND STRUCTURES AND STORE IN THE IMMEDIATE ADJACENT TOBACCO BARD.
9. COORDINATE THE REMOVAL OF EXISTING OVERHEAD ELECTRIC FACILITIES WITH ELECTRICAL SITE PLANS "UE" SERIES SHEETS.
10. EXISTING GRAVEL DRIVE TO REMAIN. CONTRACTOR SHALL UTILIZE EXISTING AS BASE FOR NEW LOUISVILLE LOOP – COORDINATE WITH NEW WORK "LT" SERIES SHEETS.
11. INSTALL TREE PROTECTION FENCING (REINFORCED SILT FENCE PER MSD EF-10-02). COORDINATE WITH TREE PRESERVATION NOTES, SHEET G0.12.
12. INSTALL ORANGE CONSTRUCTION FENCING AROUND ARCHEOLOGICAL / GLADECREST / WETLAND AREAS AS SHOWN ON PLAN PRIOR TO ANY WORK IN PROXIMITY.
13. IN LIEU OF A CONSTRUCTION FENCE, CONTRACTOR SHALL DEMARK LIMITS OF DISTURBANCE WITH PINK SURVEY RIBBON TIED TO FOLIAGE AT INTERVALS OFTEN ENOUGH TO ASCERTAIN LIMITS ALONG THE ALIGNMENT TO LIMITS INDICATED ON PLAN. CONTRACTOR SHALL LIMIT DISTURBANCE AND PRESENCE TO THE FORK-SIDE OF THE ALIGNMENT.
14. REMOVE EXISTING WATER LINE TO LIMITS INDICATED ON PLAN. COORDINATE WITH LAYOUT PLANS AND OR UTILITY SHEETS FOR NEW ALIGNMENT INFORMATION. CONTRACTOR SHALL COORDINATE WITH THE LOUISVILLE WATER COMPANY FOR ALL ASPECTS OF THIS WORK.

Seals

STATE OF KENTUCKY
ROBERT D. MARTIN
15958
LICENSED
PROFESSIONAL ENGINEER
Robert D. Martin
5/8/13

Engineering
Planning
1046 East Chestnut Street, Louisville, Kentucky 40204
T: (502) 584-9900 F: (502) 584-0829
Kentucky • Indiana • Georgia • Tennessee • Florida

LANDSCAPE ARCHITECT
WRT
Wallace Roberts & Todd, LLC
1700 Market Street
28th Floor
Philadelphia, PA 19103
tel 215.732.5215
fax 215.732.2551

Architect
BRAVURA
111 West Washington Street
Louisville, Kentucky 40202
T: (502) 584-9900
F: (502) 584-0829

The Parklands of Floyds Fork, Project 4A

The Strand, Turkey Run Park and Broad Run

Louisville, Kentucky

Owner:
21st Century Parks, Inc.
371 W. Main St., Suite 202
Louisville, Kentucky 40202

REV #	DATE	DESCRIPTION
1	09-23-2013	Addendum #1, Archaeological Area Fencing Adjustment

Job No:	12300.4AC
Date:	May 8, 2013
Scale:	1" = 100'
Drawn By:	

BID SET

Drawing Title:

Parklands of Floyds Fork

The Strand
PROJECT 4A
Demolition and Tree Preservation

Drawing No:

ST-C2.5

May 22, 2013 – 1:36pm
C:\Users\root\appdata\local\temp\AcPublish_6712\12300.4AC-100-DEMOLITION.dwg (ST-C2.5)

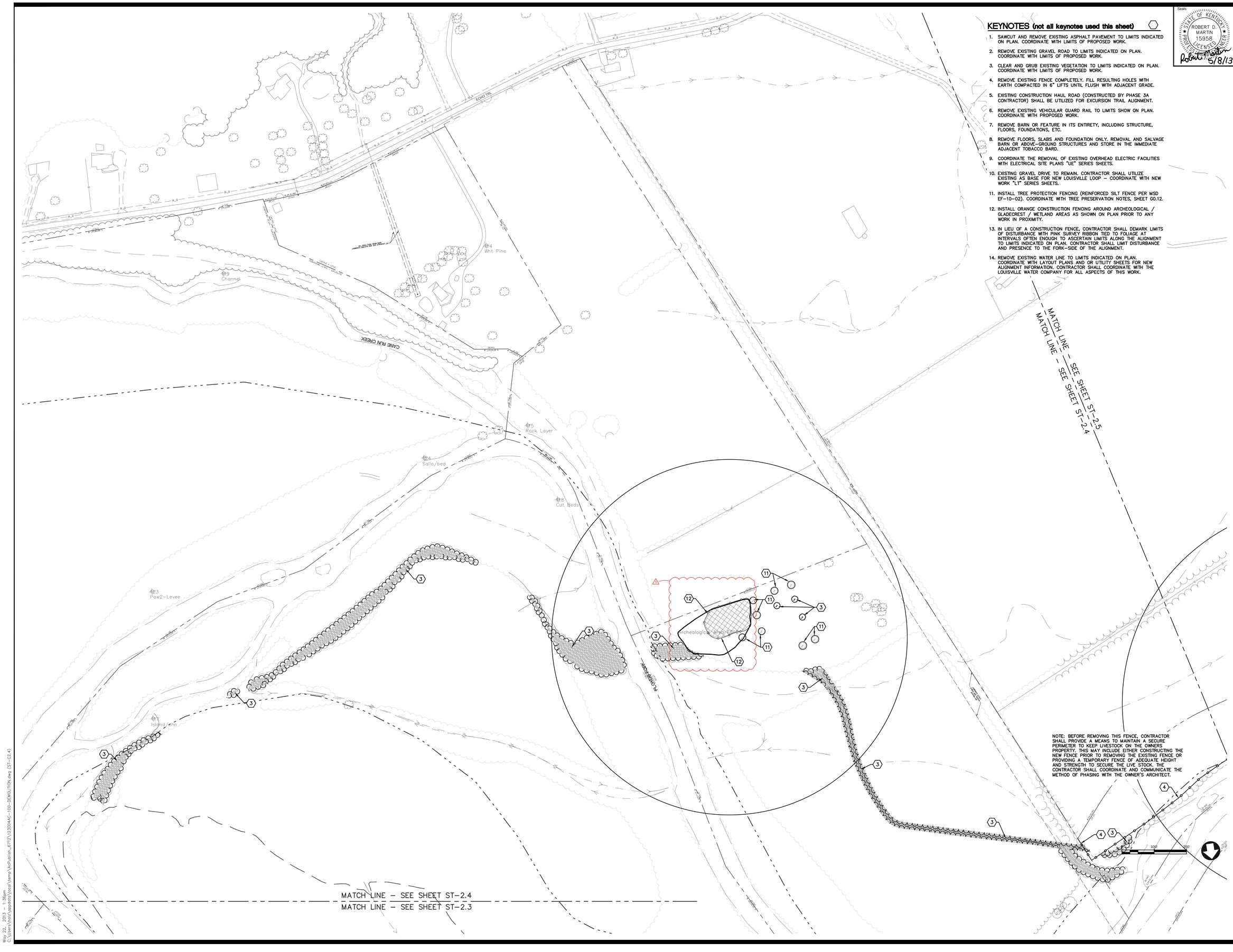

KEYNOTES (not all keynotes used this sheet)

1. SAWCUT AND REMOVE EXISTING ASPHALT PAVEMENT TO LIMITS INDICATED ON PLAN. COORDINATE WITH LIMITS OF PROPOSED WORK.
2. REMOVE EXISTING GRAVEL ROAD TO LIMITS INDICATED ON PLAN. COORDINATE WITH LIMITS OF PROPOSED WORK.
3. CLEAR AND GRUB EXISTING VEGETATION TO LIMITS INDICATED ON PLAN. COORDINATE WITH LIMITS OF PROPOSED WORK.
4. REMOVE EXISTING FENCE COMPLETELY. FILL RESULTING HOLES WITH EARTH COMPACTED IN 6" LIFTS UNTIL FLUSH WITH ADJACENT GRADE.
5. EXISTING CONSTRUCTION HAUL ROAD (CONSTRUCTED BY PHASE 3A CONTRACTOR) SHALL BE UTILIZED FOR EXCURSION TRAIL ALIGNMENT.
6. REMOVE EXISTING VEHICULAR GUARD RAIL TO LIMITS SHOW ON PLAN. COORDINATE WITH PROPOSED WORK.
7. REMOVE BARN OR FEATURE IN ITS ENTIRETY, INCLUDING STRUCTURE, FLOORS, FOUNDATIONS, ETC.
8. REMOVE FLOORS, SLABS AND FOUNDATION ONLY. REMOVAL AND SALVAGE BARN OR ABOVE-GROUND STRUCTURES AND STORE IN THE IMMEDIATE ADJACENT TOBACCO BARD.
9. COORDINATE THE REMOVAL OF EXISTING OVERHEAD ELECTRIC FACILITIES WITH ELECTRICAL SITE PLANS "UE" SERIES SHEETS.
10. EXISTING GRAVEL DRIVE TO REMAIN. CONTRACTOR SHALL UTILIZE EXISTING AS BASE FOR NEW LOUISVILLE LOOP – COORDINATE WITH NEW WORK "LT" SERIES SHEETS.
11. INSTALL TREE PROTECTION FENCING (REINFORCED SILT FENCE PER MSD EF-10-02). COORDINATE WITH TREE PRESERVATION NOTES, SHEET G0.12.
12. INSTALL ORANGE CONSTRUCTION FENCING AROUND ARCHEOLOGICAL / GLADECREST / WETLAND AREAS AS SHOWN ON PLAN PRIOR TO ANY WORK IN PROXIMITY.
13. IN LIEU OF A CONSTRUCTION FENCE, CONTRACTOR SHALL DEMARK LIMITS OF DISTURBANCE WITH PINK SURVEY RIBBON TIED TO FOLIAGE AT INTERVALS OFTEN ENOUGH TO ASCERTAIN LIMITS ALONG THE ALIGNMENT TO LIMITS INDICATED ON PLAN. CONTRACTOR SHALL LIMIT DISTURBANCE AND PRESENCE TO THE FORK-SIDE OF THE ALIGNMENT.
14. REMOVE EXISTING WATER LINE TO LIMITS INDICATED ON PLAN. COORDINATE WITH LAYOUT PLANS AND OR UTILITY SHEETS FOR NEW ALIGNMENT INFORMATION. CONTRACTOR SHALL COORDINATE WITH THE LOUISVILLE WATER COMPANY FOR ALL ASPECTS OF THIS WORK.

Seals

STATE OF KENTUCKY
ROBERT D. MARTIN
15958
LICENSED
PROFESSIONAL ENGINEER
Robert D. Martin 5/8/13

Engineering
Planning
1046 East Chestnut Street, Louisville, Kentucky 40204
Phone: 502.584.9900 Fax: 502.584.0829
Kentucky • Indiana • Georgia • Tennessee • Florida

LANDSCAPE ARCHITECT
WRT
Wallace Roberts & Todd, LLC
1700 Market Street
28th Floor
Philadelphia, PA 19103
tel 215.732.5215
fax 215.732.2551

Architect
BRAVURA
111 West Washington Street
Louisville, Kentucky 40202
T: (502) 584-9900
F: (502) 584-0829

The Parklands of Floyds Fork, Project 4A

The Strand, Turkey Run Park and Broad Run
Louisville, Kentucky

Owner:
21st Century Parks, Inc.
371 W. Main St., Suite 202
Louisville, Kentucky 40202

REV #	DATE	DESCRIPTION
1	05-23-2013	Addendum #1, Archaeological Area Fencing Adjustment

Job No:	12300.4AC
Date:	May 8, 2013
Scale:	1" = 100'
Drawn By:	

BID SET

Drawing Title:
Parklands of Floyds Fork
The Strand
PROJECT 4A
Demolition and Tree Preservation

Drawing No:
ST-C2.4

May 22, 2013 – 1:36pm
C:\Users\local\appdata\local\temp\AcPublish_6712\12300.4AC-100-DEMOLITION.dwg (ST-C2.4)

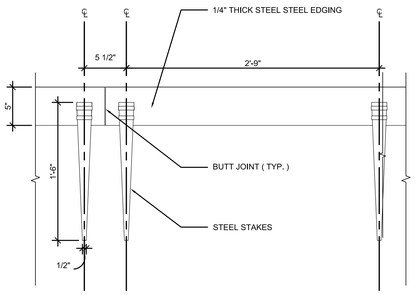

STEEL EDGING - ELEVATION

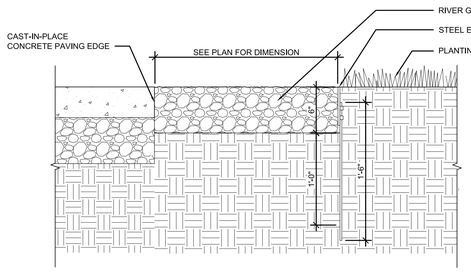

STEEL EDGEING AT DRAINAGE GRAVEL - SECTION

DRAINAGE GRAVEL AREA

SCALE: 1 1/2" = 1'-0"

2 / SP1-101

GENERAL NOTES

1. REFER TO CIVIL DRAWINGS FOR TRAIL, ROAD AND LOOP ALIGNMENTS BEYOND WHAT IS SHOWN.

2. UNLESS OTHERWISE NOTED ON THESE DRAWINGS, REFER TO CIVIL DRAWINGS FOR SPOT ELEVATIONS & SITE GRADING.

3. SEAT WALLS AND ROCK FENCE DIMENSIONS ARE TAKEN AT THE CENTERLINE OF THE WALL ARC.

4. PROTECTION OF TREES IS CRITICALLY IMPORTANT WITHIN ALL AREAS OF THE WORK. PRIOR TO ANY CLEARING, THE "LIMITS OF DISTURBANCE" FOR CONSTRUCTION OF ALL BUILDINGS, ARCHITECTURAL FEATURES, PLAZAS, AND UNDERGROUND UTILITIES SHALL BE STAKED BY THE CONTRACTOR, AND THE STAKED ALIGNMENTS SHALL BE REVIEWED BY THE OWNER'S DESIGNATED TREE PROTECTION REPRESENTATIVE. NO CLEARING OR CONSTRUCTION ACTIVITY SHALL OCCUR UNTIL THE AREAS TO BE DISTURBED ARE STAKED, REVIEWED AND APPROVED BY THE OWNER'S REPRESENTATIVE. CLEARING SHALL BE MINIMIZED AND STRICTLY LIMITED TO THE STAKED AND APPROVED AREAS OF DISTURBANCE. DURING CONSTRUCTION, THE CONTRACTOR SHALL AVOID USING ANY UNCLEARED WOODED AREAS OUTSIDE OF THE APPROVED AREAS OF DISTURBANCE FOR ACCESS, MATERIAL STORAGE OR PARKING.

KEY NOTES

- A — SEAT WALL, SEE DETAILS 2&3/A7-301
- B — PLANTATION ERA ROCK FENCE, SEE DETAILS 1&8/A7-301
- C — CONTROL JOINT, SEE DETAIL 7/A7-301
- D — EXPANSION JOINT, SEE DETAIL 6/A7-301
- E — LOUISVILLE LOOP, SEE CIVIL DRAWINGS FOR LAYOUT AND DETAILS
- F — ADA DETECTABLE WARNING PAVERS, SEE DETAILS 4&5/A7-301
- G — EXCURSION TRAIL – SEE CIVIL DRAWINGS FOR LAYOUT AND DETAILS
- H — C.I.P. CONCRETE PEDESTRIAN WALK, SEE DETAIL 9/A7-301
- I — BOLLARDS/FENCES/GATES, SEE DRAWING SUBSET A8-100 FOR DETAILS & LAYOUT
- J — CULVERT, SEE CIVIL DRAWINGS FOR LAYOUT AND DETAILS
- K — BRIDGE, SEE CIVIL DRAWINGS FOR LAYOUT AND DETAILS
- L — ROAD STRIPPING, SEE CIVIL DRAWINGS AND SPECIFICATIONS FOR DETAILS
- M — PARKING LOT, SEE CIVIL DRAWINGS FOR LAYOUT AND DETAILS
- N — TRAILHEAD SIGNAGE, SEE DETAILS 11,12,13/A7-301
- O — LATERAL FIELD, SEE CIVIL DRAWINGS FOR LAYOUT AND DETAILS
- P — 4 RAIL FENCE & GATE, SEE SUBSET A8-100 FOR DETAILS & LAYOUT
- Q — RETAINING WALL, SEE CIVIL DRAWINGS FOR LAYOUT AND DETAILS
- R — UTILITY LINES, SEE CIVIL DRAWINGS FOR LAYOUT ND DETAILS
- S — LIMESTONE BENCH – SEE DETAIL 10/A7-301
- T — BIKE RACK, N.I.C.
- U — TRASH CAN, N.I.C.
- V — BENCH, N.I.C.
- W — PICNIC TABLE, N.I.C.
- X — LIGHT BOLLARD, SEE ELECTRICAL DRAWINGS FOR FIXTURE TYPE AND DETAILS

SITE PLAN - THE STRAND TRAILHEAD PLAZA

SCALE: 1" = 10'-0"

1 / SP1-101

Architecture
Engineering
Planning

815 West Market Street, Suite 200, Louisville, Kentucky 40202
Phone 502.584.9900 www.bravura.com
Kentucky · Indiana · Georgia · West Virginia · Tennessee · Florida

LANDSCAPE ARCHITECT

Wallace Roberts & Todd, LLC
1700 Market Street
28th Floor
Philadelphia, PA 19103
tel 215.732.5215
fax 215.732.2551

Architect
BRAVURA
111 West Washington Street
Louisville, Kentucky 40202
T: (502) 584-9900
F: (502) 584-0829

The Parklands of Floyds Fork, Project 4A
The Strand, Turkey Run Park and Broad Run Park
Louisville, Kentucky

Owner:
21st Century Parks, Inc.
371 W. Main St., Suite 202
Louisville, Kentucky 40202

REV #	DATE	DESCRIPTION
	05/08/2013	ISSUED FOR BID
1	05/23/2013	ADDENDUM #1: REVISED TITLE TO READ, "ADD-ALT. NO.2"

Job No:	155-617
Date:	May 23, 2013
Scale:	As Shown
Drawn By:	

ISSUED FOR ADDENDUM #1

Drawing Title:

1 Parklands of Floyds Fork

ADD-ALT. NO.2
PROJECT 4A
The Strand
2-Hole Trailhead
Site Plan

Drawing No:

SP1-101

May 21, 2013 – 5:06pm
Z:\Drawings\K1155-Floyds Fork\K1155-617 Project 4\Structures\SP1-101-SPS-101 – Trailhead Site Plans.dwg (SP1-101-Cornell)

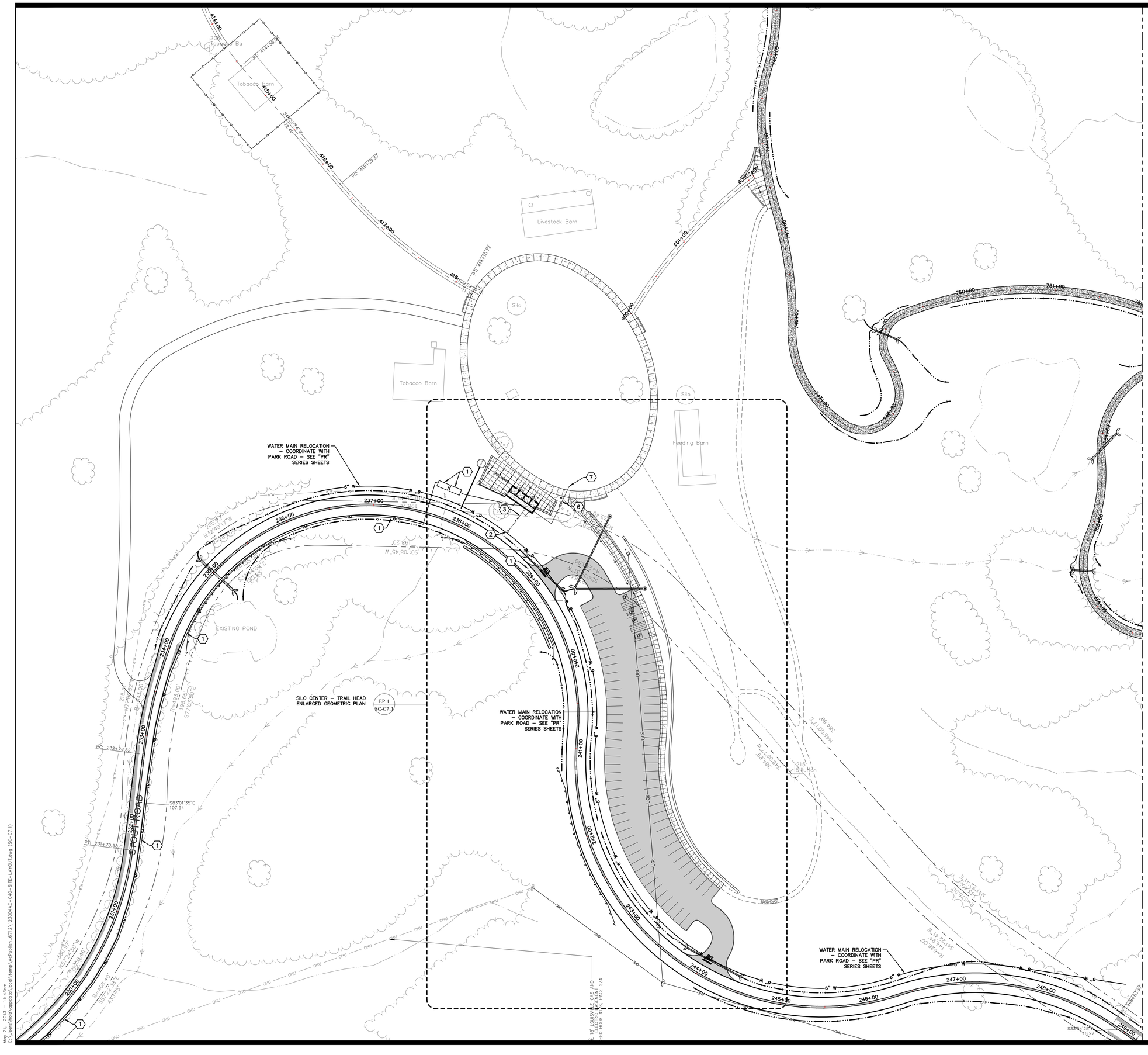

Seals

STATE OF KENTUCKY
ROBERT D. MARTIN
15958
LICENSED
PROFESSIONAL ENGINEER
Robert D. Martin 5/8/13

KEYNOTES (not all keynotes used this sheet)

1. SEPTIC TANK, PUMP TANK AND LATERAL FIELD SHALL ALL BE DESIGNED BY THE CONTRACTOR THROUGH COORDINATION WITH THE METRO HEALTH DEPARTMENT. CONTRACTOR SHALL SUBMIT FINAL DESIGN TO THE OWNER'S ENGINEER FOR APPROVAL PRIOR TO ANY CONSTRUCTION. FOR BIDDING PURPOSES, ASSUME THAT THE SEPTIC SYSTEM SHALL CONSIST OF COMPONENTS, AND SIZE REQUIREMENTS AS OUTLINED IN "SEPTIC SYSTEM SPECIFICATIONS AND NOTES", THIS SHEET.
2. CONTRACTOR SHALL COORDINATE WITH THE LOUISVILLE WATER COMPANY FOR INSTALLATION OF A 2" WATER METER AND PIT (3" METER FOR SILO CENTER ONLY). COORDINATE THE EXACT LOCATION OF WATER METER WITH THE LOUISVILLE WATER COMPANY.
3. CONTRACTOR SHALL INSTALL 2" SCH.40 PVC WATER LINE FROM WATER METER TO LOCATION INDICATED ON PLAN. INSTALL WATER LINE PER DETAIL 3, SHEET 9.2 AND IN ACCORDANCE WITH LOUISVILLE WATER COMPANY STANDARDS AND PLUMBING CODE. CONTRACTOR SHALL WORK WITH OWNER TO FACILITATE THE ORDERING OF NEW WATER SERVICE.
4. EXISTING 12" WATER MAIN SHALL BE RELOCATED AS INDICATED ON PLAN. CONTRACTOR SHALL BE RESPONSIBLE FOR LABOR AND TESTING COSTS ONLY; COST OF LWC DESIGN, MATERIALS AND INSPECTION SHALL BE THE RESPONSIBILITY OF 21CP. INSTALLATION SHALL BE PERFORMED IN ACCORDANCE WITH LOUISVILLE WATER COMPANY STANDARDS.
5. CONTRACTOR SHALL INSTALL 3" SCH.40 PVC WATER LINE WHERE INDICATED ON PLAN. INSTALL WATER LINE PER DETAIL 3, SHEET C9.2 AND IN ACCORDANCE WITH LOUISVILLE WATER COMPANY STANDARDS AND PLUMBING CODE. INSTALL THRUST BLOCKS PER DETAIL 4, SHEET C9.2.
6. CONTRACTOR SHALL INSTALL 2" SCH.40 PVC WATER IRRIGATION SUPPLY LINE TO LIMITS INDICATED ON PLAN. INSTALL PER DETAIL 3, SHEET C9.2 AND IN ACCORDANCE WITH LOUISVILLE WATER COMPANY STANDARDS.
7. CONTRACTOR SHALL INSTALL BALL VALVE, VALVE BOX AND CAP AT PIPE TERMINUS WHERE INDICATED ON PLAN.

GENERAL NOTES

A. ALL CONSTRUCTION RELATING TO WATERLINES SHALL BE INSTALL IN ACCORDANCE WITH LOUISVILLE WATER COMPANY STANDARDS AND APPLICABLE PLUMBING CODE(S).

B. CONTRACTOR SHALL COORDINATE WITH THE LOUISVILLE WATER COMPANY AND EITHER METRO PUBLIC WORKS OR THE KENTUCKY DEPARTMENT OF TRANSPORTATION (AS REQUIRED) FOR REQUIREMENTS AND ALL WORK RELATED TO THE INSTALLATION OF WATER SERVICE LINES REQUIRING THE CROSSING OF EXISTING ROADWAYS.

C. CONTRACTOR SHALL BE RESPONSIBLE FOR PAYING ALL APPLICABLE TAP FEES, METER FEES AND SYSTEM DEVELOPMENT FEES.

D. ALL UNDERGROUND PRESSURE PIPING SHALL HAVE FLEXIBLE JOINTS SUCH AS MECHANICAL JOINTS OR PUSH–ON.

E. ALL BENDS AND TERMINUSES OF UNDERGROUND PRESSURE PIPING SHALL HAVE EITHER RESTRAINED JOINTS OR THRUST BLOCKS.

F. COORDINATE ELECTRICAL SERVICE WITH "E5" SERIES ELECTRICAL PLANS.

SEPTIC SYSTEM SPECIFICATIONS AND NOTES

A. CERTIFIED INSTALLER MUST OBTAIN AN INSTALLATION PERMIT FROM THE METRO HEALTH DEPARTMENT ($405).

B. 2,000 GALLON CAPACITY PRECAST CONCRETE SEPTIC TANK (KENTUCKY STATE APPROVED).

C. RISER AND LID FOR GROUND LEVEL ACCESS ON SEPTIC TANK INLET AND OUTLET ENDS.

D. 2,000 GALLON CAPACITY PRECAST CONCRETE PUMP TANK (KENTUCKY STATE APPROVED).

E. RISER AND LID FOR GROUND LEVEL ACCESS ON PUMP TANK.

F. EFFLUENT PUMP 1/2 HP (115 VOLT INSTALLED ON A DEDICATED 20 AMP BREAKER).

G. HIGH WATER ALARM (SEPERATE LOW VOLTAGE CIRCUIT) LOCATION TO BE DETERMINED BY PROJECT ARCHITECT.

H. BACKFILL AROUND SEPTIC TANK AND PUMP TANK WITH JETTED LIMESTONE SAND TO ENSURE WATER TIGHTNESS.

I. COORDINATE WITH PLUMBING AND ELECTRICAL SHEETS FOR PUMP AND HIGH LEVEL ALARM RELATED INFORMATION.

J. ALL GRAVITY PIPING SHALL BE 4" SCH. 40 PVC.

K. SUPPLY LINE TO HAVE #10 COPPER GROUND WIRE INSTALLED DIRECTLY ABOVE PIPE FOR FUTURE LOCATING PURPOSES.

L. LATERAL FIELD SHALL BE 415 FEET IN LENGTH x 6' WIDE LEACHING CHAMBER BEDS INSTALLED 12 INCHES IN DEPTH WITH 6" OF SETTLED TOPSOIL COVER OVER ENTIRE LATERAL FIELD.

M. INSTALL DISTRIBUTION BOX AS REQUIRED.

N. PROVIDE VERTICAL CLEANOUTS TO FACILITATE SYSTEM MAINTENANCE.

O. AREA OF TANKS AND LATERAL FIELD SHALL BE FINISHED GRADED AFTER SETTLEMENT IN COMPLETE.

P. AREA OF TANKS AND LATERAL FIELD SHALL BE PROTECTED FROM EQUIPMENT, VEHICLES, MATERIAL STORAGE, ETC.

Engineering
Planning
1046 East Chestnut Street, Louisville, Kentucky 40204
Phone: 502.584.6300 Fax: 502.584.6305
Kentucky • Indiana • Georgia • Tennessee • Florida

LANDSCAPE ARCHITECT
WRT
Wallace Roberts & Todd, LLC
1700 Market Street
28th Floor
Philadelphia, PA 19103
tel 215.732.5215
fax 215.732.2551

Architect
BRAVURA
111 West Washington Street
Louisville, Kentucky 40202
T: (502) 584-0900
F: (502) 584-0829

The Parklands of Floyds Fork, Project 4A

The Strand, Turkey Run Park and Broad Run
Louisville, Kentucky

Owner:
21st Century Parks, Inc.
371 W. Main St., Suite 202
Louisville, Kentucky 40202

REV #	DATE	DESCRIPTION
1	05-23-2013	Revised septic system specification

Job No:	12300.4AC
Date:	May 8, 2013
Scale:	1" = 40'
Drawn By:	

BID SET

Drawing Title:

Parklands of Floyds Fork

Silo Center PROJECT 4A Trail Head Utilities

Drawing No:

SC-C7.1

May 21, 2013 – 11:43am
C:\Users\hock\appdata\local\temp\AcPublish_6712\12300AC-040-SITE-LAYOUT.dwg (SC-C7.1)

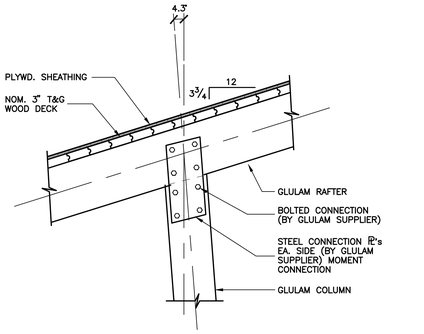

SECTION A S1-301
TRES137
SCALE: ¾" = 1'-0

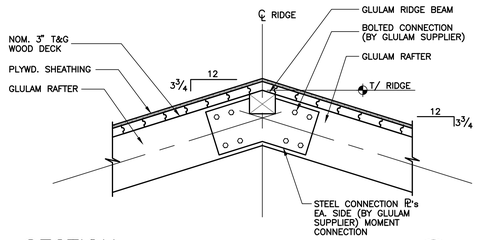

SECTION B S1-301
TRES137A
SCALE: ¾" = 1'-0

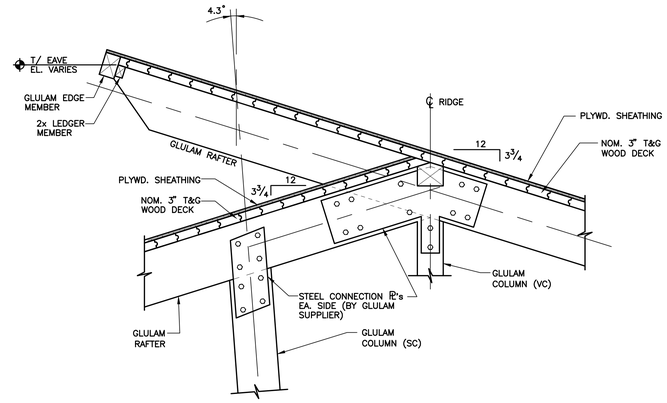

SECTION C S1-301
TRES137P
SCALE: ¾" = 1'-0

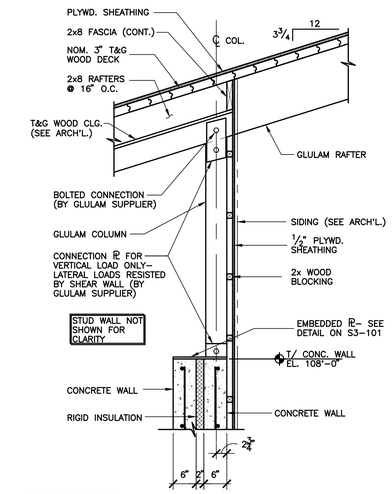

SECTION D S1-301
TRES137K
SCALE: ¾" = 1'-0

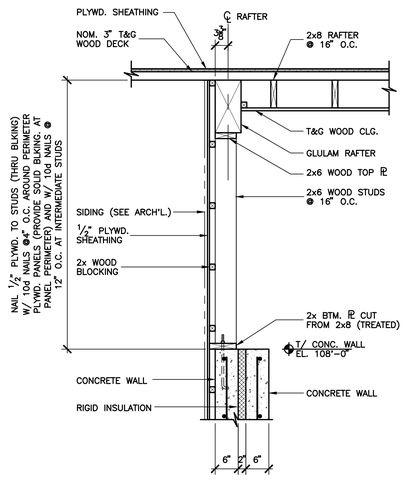

SECTION E S1-301
TRES133R
SCALE: ¾" = 1'-0

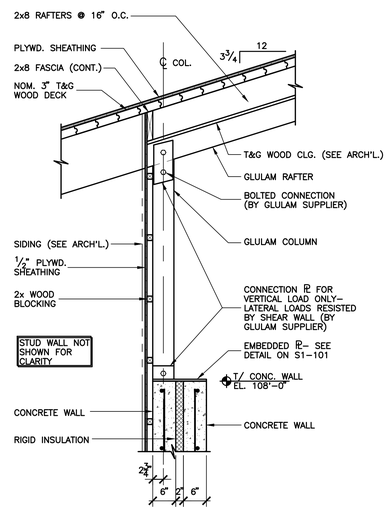

SECTION F S1-301
TRES137F
SCALE: ¾" = 1'-0

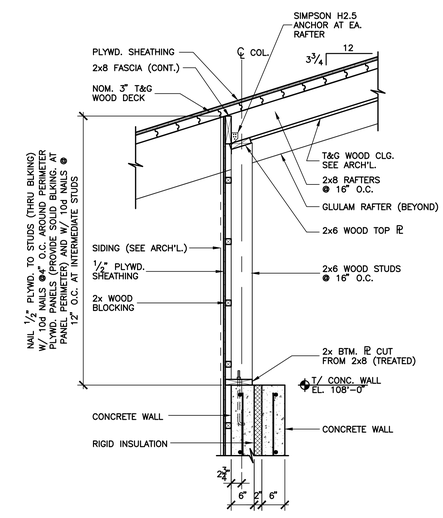

SECTION G S1-301
TRES133Q
SCALE: ¾" = 1'-0

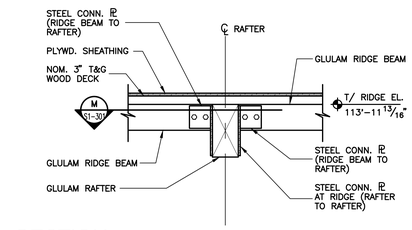

SECTION H S1-301
TRES134D
SCALE: ¾" = 1'-0

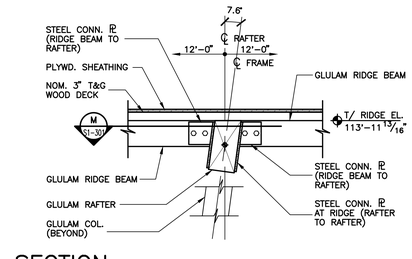

SECTION J S1-301
TRES133H
SCALE: ¾" = 1'-0

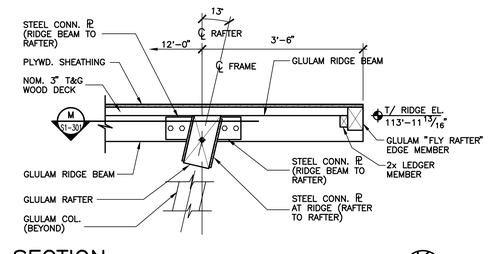

SECTION K S1-301
TRES133J
SCALE: ¾" = 1'-0

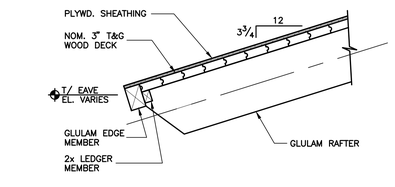

SECTION L S1-301
TRES137Q
SCALE: ¾" = 1'-0

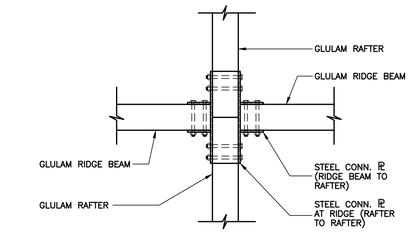

SECTION M S1-301
TRES133L
SCALE: ¾" = 1'-0

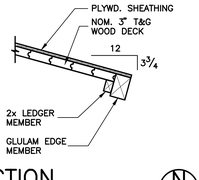

SECTION N S1-301
TRES138H
SCALE: ¾" = 1'-0

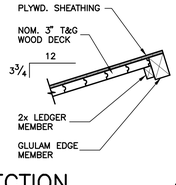

SECTION P S1-301
TRES138J
SCALE: ¾" = 1'-0

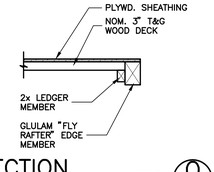

SECTION Q S1-301
TRES134A
SCALE: ¾" = 1'-0

Seals
STATE OF KENTUCKY
#10694
LICENSED PROFESSIONAL ENGINEER
5/8/13

Architecture
Engineering
Planning
815 West Market Street, Suite 200 Louisville, Kentucky 40202
Phone: 502-585-2222 Facsimile: 502-894-0065 Internet: www.dk4.com
Kentucky • Indiana • Georgia • West Virginia • Tennessee • Florida

STRUCTURAL ENGINEERS
SLESSER ENGINEERING, INC.
STRUCTURAL ENGINEERS
2525 BRIGHT AVENUE
LOUISVILLE, KENTUCKY 40232

Architect
BRAVURA
111 West Washington Street
Louisville, Kentucky 40202
T: (502) 584-9900
F: (502) 584-0829

The Parklands of Floyds Fork, Project 4A

The Strand, Turkey Run Park and Broad Run Park
Louisville, Kentucky

Owner:
21st Century Parks, Inc.
371 W. Main St., Suite 202
Louisville, Kentucky 40202

REV #	DATE	DESCRIPTION
	05/08/2013	ISSUED FOR BID
1	05/23/2013	ADDENDUM #1, REVISED TITLE TO READ, "ADD-ALT. NO.2"

Job No:	155-617
Date:	May 23, 2013
Scale:	As Shown
Drawn By:	GWM

ISSUED FOR ADDENDUM #1

Drawing Title:
Parklands of Floyds Fork
ADD-ALT. NO.2
PROJECT 4A
The Strand
2-Hole Trailhead
Roof Framing Sectons

Drawing No:
S1-301

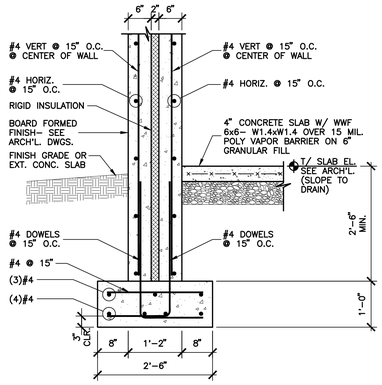

SECTION

SCALE: 3/4" = 1'-0

CFES2406 A S1-201

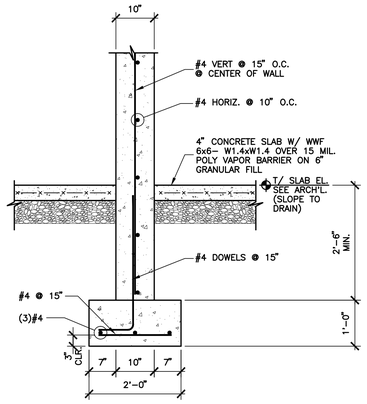

SECTION

SCALE: 3/4" = 1'-0

CFES2406A B S1-201

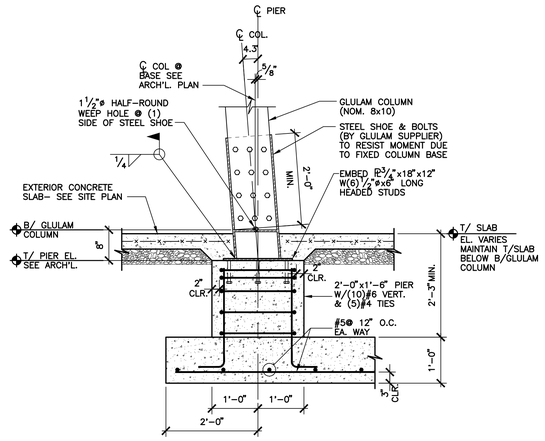

SECTION

SCALE: 3/4" = 1'-0

CFES2406B C S1-201

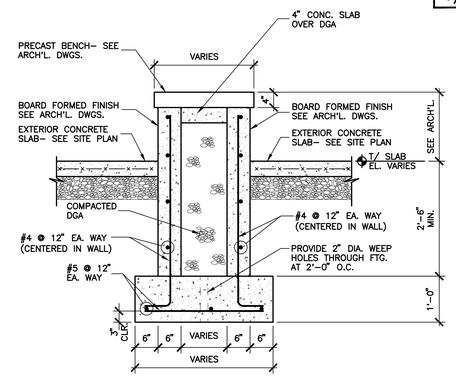

SECTION

SCALE: 3/4" = 1'-0

CFES2508A D S1-201

Seals

STATE OF KENTUCKY
#10694
LICENSED PROFESSIONAL ENGINEER
5/8/13

Architecture
Engineering
Planning

815 West Market Street, Suite 300 Louisville, Kentucky 40202
Phone: 502-585-2222 Facsimile: 502-894-0065 Internet: www.dk4.com
Kentucky • Indiana • Georgia • West Virginia • Tennessee • Florida

STRUCTURAL ENGINEERS

SLESSER ENGINEERING, INC.
STRUCTURAL ENGINEERS
SPECIAL INSPECTORS
1000 EAST MAIN ST.
LOUISVILLE, KENTUCKY 40202

Architect
BRAVURA
111 West Washington Street
Louisville, Kentucky 40202
T: (502) 584-9900
F: (502) 584-0829

The Parklands of Floyds Fork, Project 4A

The Strand, Turkey Run Park and Broad Run Park

Louisville, Kentucky

Owner:
21st Century Parks, Inc.
371 W. Main St., Suite 202
Louisville, Kentucky 40202

REV #	DATE	DESCRIPTION
	05/08/2013	ISSUED FOR BID
1	05/23/2013	ADDENDUM #1; REVISED TITLE TO READ, "ADD-ALT. NO.2"

Job No:	155-617
Date:	May 23, 2013
Scale:	As Shown
Drawn By:	GWM

ISSUED FOR ADDENDUM #1

Drawing Title:

1 Parklands of Floyds Fork

ADD-ALT. NO.2

PROJECT 4A
The Strand
2-Hole Trailhead
Foundation Sections

Drawing No:

S1-201

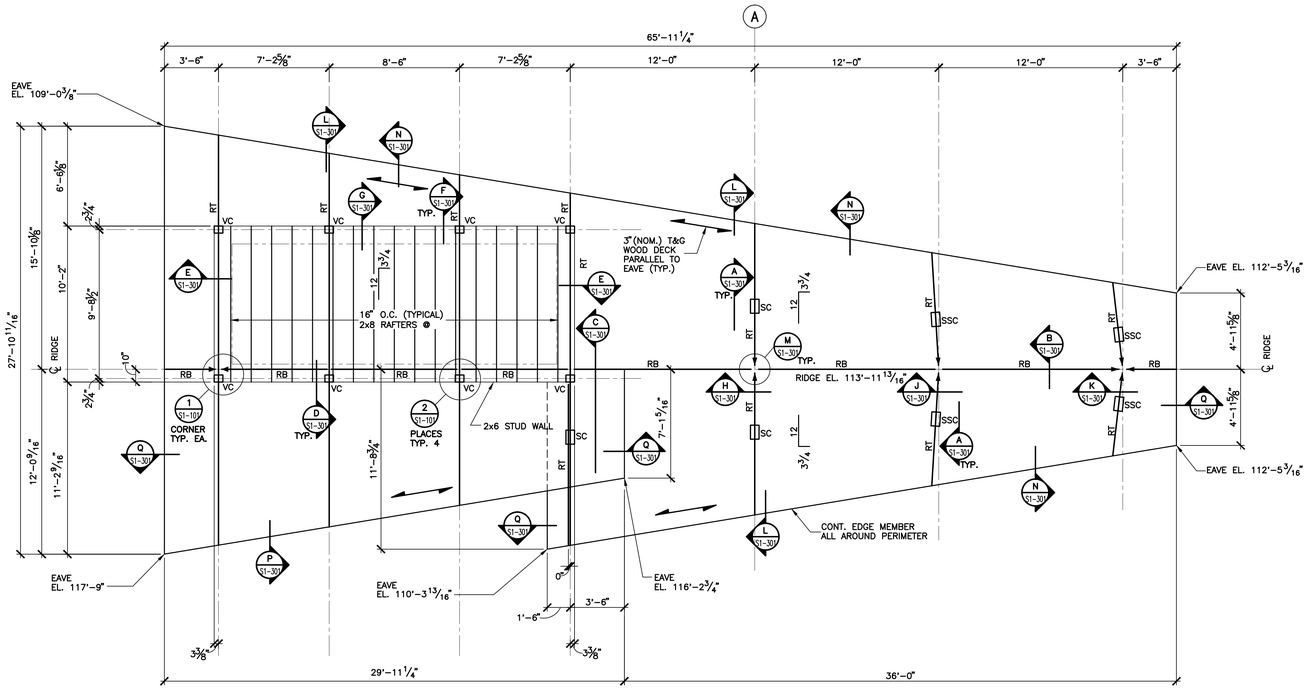

TRAILHEAD ROOF FRAMING PLAN

SCALE: 1/4" = 1'-0"

FRAMING NOTES

1. LEGEND
   RT– GLULAM RAFTER NOM. 8x12 (ACTUAL $6\frac{3}{4}$"x$13\frac{3}{4}$")

   RB– GLULAM RIDGE BEAM NOM. 8x8 (ACTUAL $6\frac{3}{4}$"x$6\frac{7}{8}$")

   *VC– VERTICAL GLULAM COLUMN– NOM. 8x6 (ACTUAL $6\frac{3}{4}$"x$5\frac{1}{2}$")

   **SC– GLULAM COLUMN– SLOPED IN ONE DIRECTION NOM. 8x10 (ACTUAL $6\frac{3}{4}$"x11")

   **SSC– GLULAM COLUMN– SLOPED IN BOTH DIRECTIONS NOM. 8x10 (ACTUAL $6\frac{3}{4}$"x11")

   *TO RESIST VERTICAL LOAD ONLY

   **FIXED AT BASE TO RESIST BASE MOMENT DUE TO LATERAL LOADS AND MOMENT DUE TO ECCENTRIC VERTICAL LOADS DUE TO SLOPED COLUMNS

2. ◄—— INDICATES MOMENT CONNECTION BY GLULAM SUPPLIER.

3. ALL GLULAM MEMBERS SIZES SHALL BE DETERMINED BY THE GLULAM SUPPLIERS DESIGN ENGINEER. SIZES INDICATED ARE APPROXIMATE AND PRELIMINARY.

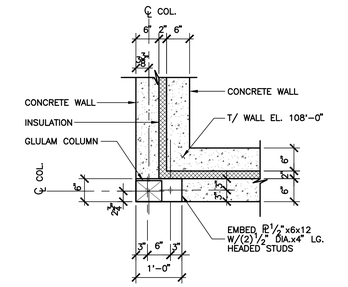

PLAN DETAIL 1 S1-101

COEDD021

SCALE: 3/4" = 1'-0

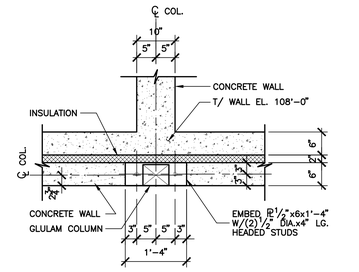

PLAN DETAIL 2 S1-101

COEDD021A

SCALE: 3/4" = 1'-0

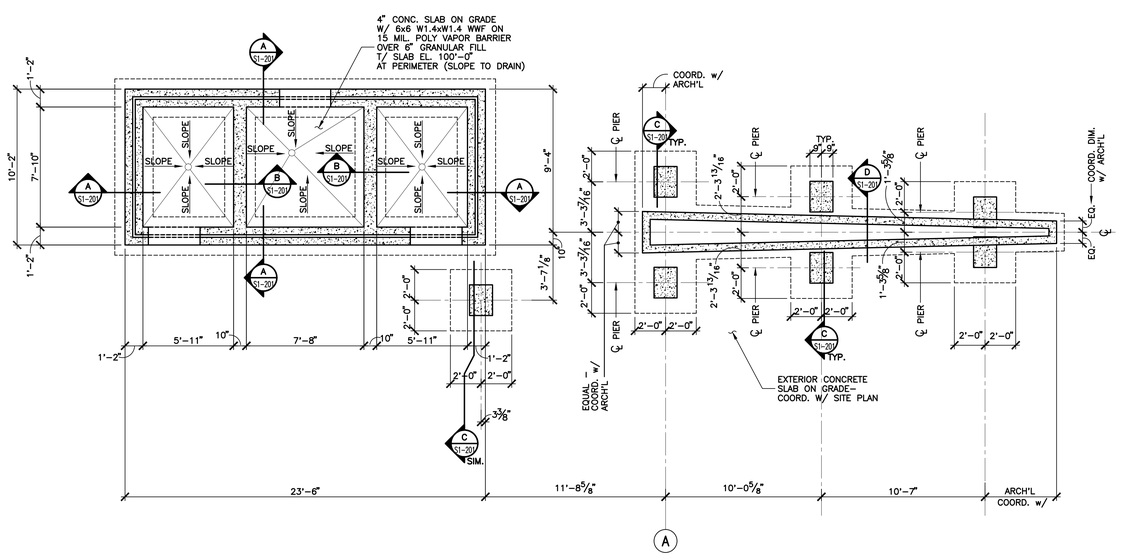

TRAILHEAD FOUNDATION PLAN

SCALE: 1/4" = 1'-0"

Seals

STATE OF KENTUCKY #10694 LICENSED PROFESSIONAL ENGINEER 5/8/13

Architecture
Engineering
Planning

815 West Market Street, Suite 300 Louisville, Kentucky 40202
Phone: 502-585-2222 Facsimile: 502-894-0065 Internet: www.bk4.com
Kentucky • Indiana • Georgia • West Virginia • Tennessee • Florida

STRUCTURAL ENGINEERS

SLESSER ENGINEERING, INC.
STRUCTURAL ENGINEERS
1800 LUNA AVENUE
LOUISVILLE, KENTUCKY 40222

Architect
BRAVURA
111 West Washington Street
Louisville, Kentucky 40202
T: (502) 584-9900
F: (502) 584-0829

The Parklands of Floyds Fork, Project 4A
The Strand, Turkey Run Park and Broad Run Park
Louisville, Kentucky

Owner:
21st Century Parks, Inc.
371 W. Main St., Suite 202
Louisville, Kentucky 40202

REV #	DATE	DESCRIPTION
	05/08/2013	ISSUED FOR BID
1	05/23/2013	ADDENDUM #1; REVISED TITLE TO READ, "ADD-ALT. NO.2"

Job No:	155-617
Date:	May 23, 2013
Scale:	As Shown
Drawn By:	GWM

ISSUED FOR ADDENDUM #1

Drawing Title:

1 Parklands of Floyds Fork
ADD-ALT. NO.2
PROJECT 4A
The Strand
2-Hole Trailhead
Plans

Drawing No:

S1-101

STRUCTURAL GENERAL NOTES

STRUCTURAL DESIGN CRITERIA

1. APPLICABLE BUILDING CODES:
   - A. 2007 KENTUCKY BUILDING CODE
   - B. 2006 INTERNATIONAL BUILDING CODE
   - C. ASCE STANDARD: ASCE 7-05

2. PROJECT LOCATION: LOUISVILLE, KENTUCKY (JEFFERSON COUNTY)

3. DESIGN LOADS:
   - A. ROOF LIVE LOAD .... 20 PSF
   - B. SNOW LOADS
     1. GROUND SNOW LOAD: Pg = 15 PSF
     2. FLAT-ROOF SNOW LOAD: Pf = 12.6 PSF
     3. SNOW EXPOSURE FACTOR: Ce = 1.0
     4. THERMAL FACTOR: Ct = 1.0
     5. SNOW LOAD IMPORTANCE FACTOR: Is = 1.0
   - C. WIND LOADS
     1. BASIC WIND SPEED = 90 MPH (3-SECOND GUSTS)
     2. WIND IMPORTANCE FACTOR: Iw = 1.0
     3. EXPOSURE CATEGORY: B
     4. DESIGN WIND PRESSURE FOR COMPONENTS AND CLADDING: P = 22.8 PSF
     5. DESIGN WIND PRESSURE FOR MAIN WIND FORCE RESISTING SYSTEM: P = 15 PSF
   - D. EARTHQUAKE LOADS
     1. SEISMIC USE GROUP: II
     2. SEISMIC DESIGN CATEGORY C
     3. SITE CLASS D
     4. RESPONSE MODIFICATION FACTOR = 1.5
     5. SYSTEM OVER STRENGTH FACTOR = 1.5
     6. DEFLECTION AMPLIFICATION FACTOR = 1.5
     7. EQUIVALENT LATERAL FORCE PROCEDURE
     8. SPECTRAL RESPONSE COEFFICIENTS:
        - S_{DS} = 0.243
        - S_{D1} = 0.156
        - S_S = 0.228
        - S_1 = 0.097
     9. TOTAL BASE SHEAR: Cs = 0.162
     10. BASIC STRUCTURAL SYSTEM: TIMBER CANTILEVERED COLUMN FRAME SYSTEM

CONTRACTOR RESPONSIBILITIES

1. MATERIAL, WORKMANSHIP, AND DESIGN SHALL CONFORM TO THE REFERENCED BUILDING CODES.
2. COORDINATE STRUCTURAL DOCUMENTS WITH THE ARCHITECTURAL, MECHANICAL, AND ELECTRICAL DOCUMENTS. ARCHITECT/STRUCTURAL ENGINEER SHALL BE NOTIFIED OF ANY DISCREPANCY OR OMISSION.
3. VERIFY THE DIMENSIONS, ELEVATIONS AND SITE CONDITIONS BEFORE STARTING WORK. ANY DISCREPANCY BETWEEN SUCH DETAILS AND DIMENSIONS AS MAY OCCUR SHALL BE REPORTED TO THE ARCHITECT/ ENGINEER FOR CLARIFICATION BEFORE PROCEEDING WITH THE WORK.
4. NOTIFY IN WRITING THE STRUCTURAL ENGINEER OF CONDITIONS ENCOUNTERED IN THE FIELD CONTRADICTORY TO THOSE SHOWN IN THE STRUCTURAL DOCUMENTS.
5. CONTRACTOR HAS SOLE RESPONSIBILITY FOR MEANS, METHODS, TECHNIQUES, SEQUENCES, AND PROCEDURES OF CONSTRUCTION.
6. CONTRACTOR HAS SOLE RESPONSIBILITY FOR THE DESIGN, ADEQUACY, AND SAFETY OF ERECTION BRACING, SHORING, TEMPORARY SUPPORTS, UNDERPINNING, ETC.
7. CONTRACTOR HAS SOLE RESPONSIBILITY TO COMPLY WITH ALL OSHA SAFETY REGULATIONS.
8. SUBMITTALS

   FURNISH ONE REPRODUCIBLE AND TWO PRINTS OF SHOP DRAWINGS. FURNISH THREE COPIES OF OTHER STRUCTURAL SUBMITTALS.

   REVIEW OF SUBMITTALS OR SHOP DRAWINGS BY THE STRUCTURAL ENGINEER DOES NOT RELIEVE THE CONTRACTOR OF THE SOLE RESPONSIBILITY TO REVIEW AND CHECK ALL SUBMITTALS AND SHOP DRAWINGS BEFORE SUBMITTING TO THE STRUCTURAL ENGINEER. CONTRACTOR REMAINS SOLELY RESPONSIBLE FOR ERRORS AND OMISSIONS ASSOCIATED WITH THE PREPARATION OF SHOP DRAWINGS AS THEY PERTAIN TO MEMBER SIZES, DETAILS, AND DIMENSIONS SPECIFIED IN THE CONTRACT DOCUMENTS.

OWNER APPOINTED REPRESENTATIVE RESPONSIBILITIES

1. PERFORM CONCRETE TESTING IN ACCORDANCE WITH SECTION 3.9 OF SPECIFICATION SECTION 033000.
   - A. AIR CONTENT TESTS.
   - B. SLUMP TESTS.
   - C. CONCRETE TEMPERATURE DETERMINATION.
   - D. CYLINDER STRENGTH TESTS.

FOUNDATIONS

1. ASSUMED ALLOWABLE SOIL BEARING PRESSURE:
   - A. CONTINUOUS WALL FOOTINGS.. 2,000 PSF
   - B. ISOLATED COLUMNS FOOTINGS.. 2,000 PSF
2. FOUNDATIONS HAVE BEEN SIZED IN ACCORDANCE WITH THE PRELIMINARY RECOMMENDATIONS OF THE MEMO, "PRELIMINARY FOUNDATION RECOMMENDATIONS FOR TRAIL HEAD BUILDINGS – PARKLAND OF FLOYDS FORK, LOUISVILLE, KY." (SOILS REPORT) PREPARED BY AMEC, DATED FEBRUARY 18, 2013.
3. THE CONTRACTOR SHALL THOROUGHLY FAMILIARIZE HIMSELF WITH THE FINDINGS AND RECOMMENDATIONS OF THE SOILS REPORT AND SHALL PERFORM ALL EARTHWORK OPERATIONS AND FOUNDATION INSTALLATION OPERATIONS IN ACCORDANCE WITH THESE RECOMMENDATIONS.
4. NO FOOTINGS OR FOUNDATIONS SHALL BE INSTALLED UNTIL THE GLULAM STRUCTURAL TIMBER SYSTEM SHOP DRAWINGS HAVE BEEN SUBMITTED AND APPROVED. COORDINATE PIER SIZE AND EMBEDDED PLATES WITH FINAL GLULAM COLUMN TO FOOTING CONNECTION DETAILS.
5. PRIOR TO CONSTRUCTION OF ANY PERMANENT STRUCTURE, ALL EXISTING SURFACE FILL, ALL TOPSOIL AND ORGANIC MATERIAL, ALL WET, SOFT, LOOSE, OR UNDESIRABLE SOIL, AND ALL OLD ABANDONED CONCRETE SHALL BE REMOVED TO THE EXTENT RECOMMENDED BY THE SOILS REPORT AND AS DIRECTED BY THE GEOTECHNICAL ENGINEER.
6. CONCRETE FOR FOOTINGS SHALL BE PLACED THE SAME DAY EXCAVATIONS ARE OPENED. IF THIS IS IMPOSSIBLE, STEPS SHALL BE TAKEN TO ADEQUATELY PROTECT THE OPEN EXCAVATION.
7. FOOTINGS SHALL BEAR ON FIRM NATURAL SOIL, OR ON PROPERLY COMPACTED ENGINEERED FILL, AS RECOMMENDED IN THE SOILS REPORT.
8. SLABS ON GRADE SHALL BEAR ON A 4-INCH LAYER OF FREE DRAINING GRANULAR MATERIAL AS SPECIFIED IN THE SOILS REPORT. FOLLOW THE PROCEDURES RECOMMENDED IN THE SOILS REPORT.
9. ENGINEERED FILL & BACKFILL SHALL BE PLACED AND COMPACTED ACCORDING TO THE RECOMMENDATIONS OF THE SOILS REPORT AND THE INSTRUCTIONS OF THE GEOTECHNICAL ENGINEER.
10. THE GENERAL CONTRACTOR SHALL RETAIN A QUALIFIED GEOTECHNICAL ENGINEER TO INSPECT ALL BEARING SURFACES AND ALL EARTHWORK OPERATIONS.
11. ALL FOOTING INSTALLATION SHALL BE OBSERVED AND DOCUMENTED BY THE GEOTECHNICAL ENGINEER (INSPECTOR) TO ASSURE THAT THE DESIGN CRITERIA ARE BEING OBTAINED. ALL GEOTECHNICAL FIELD REPORTS SHALL BE SUBMITTED TO THE ARCHITECT/ENGINEER.
12. PROVIDE CONTROL JOINTS IN SLAB ON GRADE AT MAXIMUM 20 FEET SPACING EACH DIRECTION, UNLESS NOTED OTHERWISE. CONTRACTOR SHALL SUBMIT A SLAB JOINT PLAN FOR APPROVAL PRIOR TO PLACING CONCRETE FOR FLOOR SLAB (SEE CONCRETE GENERAL NOTE NO. 18).

CONCRETE

1. ALL CONCRETE FOR GENERAL USE (INCLUDING FOOTINGS AND FOUNDATION WALLS) SHALL HAVE A MINIMUM 28 DAY COMPRESSIVE STRENGTH OF 4000 PSI.
2. REINFORCING STEEL SHALL BE AS FOLLOWS:
   - STIRRUPS AND TIES .... ASTM A615 GRADE 60
   - ALL OTHER REINFORCING .... ASTM A615 GRADE 60
   - WELDED WIRE FABRIC .... ASTM A185
3. PROVIDE BAR SUPPORTS AND SPACERS IN ACCORDANCE WITH ACI DETAILING MANUAL. ALL BAR SUPPORTS IN AREAS WHERE CONCRETE WILL BE EXPOSED SHALL HAVE PLASTIC FEET. PRECAST CONCRETE (fc'=3000psi) BLOCKS 3"x3"x3" SHALL BE USED TO SUPPORT REINFORCING OFF OF THE GROUND. AT ALL OTHER LOCATIONS, CHAIRS OR STANDEES SHALL BE USED.
4. DETAILING, FABRICATION AND PLACING OF REINFORCING SHALL CONFORM TO APPLICABLE PROVISIONS OF ACI 315 AND ACI 318.
5. SLABS AND FOOTINGS SHALL HAVE NO HORIZONTAL JOINTS. ANY STOP IN CONCRETE WORK MUST BE MADE WITH VERTICAL KEYED BULKHEADS. ALL REINFORCEMENT SHALL CONTINUE THROUGH JOINTS.
6. BEFORE PLACING CONCRETE, THE CONTRACTOR SHALL NOTIFY ALL SUBCONTRACTORS TO BE SURE ALL SLEEVES, CONDUIT, CHASES, ETC. ARE PROPERLY INSTALLED. THE CONTRACTOR SHALL NOTIFY THE ARCHITECT/ENGINEER AS SOON AS PRACTICAL, BUT AT LEAST 24 HOURS PRIOR TO PLACING CONCRETE TO ALLOW FOR INSPECTION OF REINFORCING AND EMBEDDED ITEMS.
7. MATERIALS SHALL COMPLY WITH REQUIREMENTS OF DESIGNATED SPECIFICATIONS OF AMERICAN SOCIETY FOR TESTING AND MATERIALS, 1916 RACE STREET, PHILADELPHIA, PENNSYLVANIA.
8. CONSTRUCTION PROCEDURES SHALL COMPLY WITH RECOMMENDATIONS SET FORTH IN DESIGNATED STANDARDS OF AMERICAN CONCRETE INSTITUTE, P.O. BOX 9094, FARMINGTON HILLS, MICHIGAN 48333.
9. ADMIXTURE OTHER THAN AIR-ENTRAINING SHALL NOT BE USED WITHOUT APPROVAL OF THE ARCHITECT/ENGINEER. AIR-ENTRAINING ADMIXTURES SHALL CONFORM TO ASTM C260.
10. CURING COMPOUND SHALL CONFORM TO FEDERAL SPECIFICATION TT-C800A, AND A.S.T.M. C309. THE MATERIAL SHALL BE EQUAL TO SONNEBORN KUR-N-SEAL, MASTERSEAL, BY MASTER BUILDERS, OR CLEAR SEAL, BY W.R. GRACE.
11. ALL REINFORCING SPLICES SHALL BE CLASS B TENSION LAP SPLICE.
12. SPREAD BARS AROUND SMALL OPENINGS AND SLEEVES IN SLABS AND WALLS WHERE POSSIBLE AND WHERE BAR SPACING WILL NOT EXCEED 1.5 TIMES THE NORMAL SPACING. DISCONTINUE BARS AT LARGE OPENINGS WHERE NECESSARY AND PROVIDE AN AREA OF REINFORCEMENT EQUAL TO THE INTERRUPTED REINFORCEMENT, DISTRIBUTING ONE-HALF OF THIS REINFORCEMENT EACH SIDE OF THE OPENING (CLASS B TENSION LAP SPLICED). HOLES LARGER THAN 12 INCHES IN ANY DIRECTION SHALL HAVE (1) #5x5'-0" DIAGONAL BAR IN BOTH FACES AT EACH CORNER.
13. PIER REINFORCEMENT SHALL BE DOWELED TO THE FOOTING. PROVIDE DOWELS EQUAL IN SIZE, NUMBER AND GRADE TO THE PIER REINFORCEMENT UNLESS OTHERWISE INDICATED. DOWELS SHALL BE LAPPED WITH THE PIER REINFORCEMENT.
14. PIER REINFORCEMENT SHALL BE THE SAME SIZE, NUMBER AND GRADE AS THE COLUMN/PILASTER REINFORCING, UNLESS OTHERWISE NOTED.
15. ALL VERTICAL CONCRETE SURFACES SHALL BE FORMED. HOWEVER, VERTICAL SURFACES OF FOOTINGS MAY BE EARTH-FORMED IF THE SOIL IS SUFFICIENTLY STIFF TO PREVENT CAVE-INS.
16. REINFORCING BARS SHALL BE IN PLACE AND SECURED PRIOR TO POURING CONCRETE.
17. REINFORCING BAR SHOP DRAWINGS SHALL SHOW NUMBER, SIZE AND LOCATION OF BARS, AS WELL AS LAP LENGTH AND CLEAR COVER.
18. ALL CONCRETE SLABS SUPPORTED BY SOIL OR GRANULAR SUB-BASE SHALL CONTAIN CONTROL JOINTS AND CONSTRUCTION JOINTS, AT SPACING NOT TO EXCEED 20 FEET ON CENTER IN BOTH DIRECTIONS. SAW-CUT JOINTS SHALL BE INSTALLED AS SOON AS THE CONCRETE IS HARD ENOUGH TO WITHSTAND SAWING WITHOUT RAVELING JOINT EDGES OR DISLODGING COARSE AGGREGATE PARTICLES. LIGHTWEIGHT EARLY-CUT SAWS SHALL BE USED. CONTRACTOR SHALL SUBMIT CONSTRUCTION AND CONTROL JOINT LAYOUT FOR APPROVAL PRIOR TO PLACING CONCRETE SLABS.
19. ANCHOR BOLTS (ANCHOR RODS) SHALL COMPLY WITH ASTM F1554, GRADE 36. PROVIDE HEAVY HEXAGON STRUCTURAL NUTS AND WASHERS AS REQUIRED.

GLULAM TIMBER STRUCTURES

1. ONE SUPPLIER SHALL BE RESPONSIBLE FOR THE DESIGN, DETAILING, MANUFACTURE, FABRICATION, AND INSTALLATION OF THE ENTIRE GLULAM TIMBER STRUCTURAL SYSTEM INCLUDING GLULAM BEAMS, COLUMNS, AND FRAMES; TONGUE AND GROOVE LAMINATED WOOD DECKING; ALL DECKING TO BEAM CONNECTIONS, ALL BEAM TO COLUMN CONNECTIONS, AND ALL COLUMN TO FOOTING CONNECTIONS; AND ALL OTHER MISCELLANEOUS ITEMS NECESSARY FOR A COMPLETE INSTALLATION.
2. THE DESIGN OF THE GLULAM TIMBER STRUCTURAL SYSTEM SHALL BE PERFORMED BY AN ENGINEER REGISTERED IN THE STATE OF KENTUCKY. ALL DESIGN CALCULATIONS SHALL BEAR THE SEAL AND SIGNATURE OF THE ENGINEER RESPONSIBLE FOR THE GLULAM TIMBER STRUCTURAL SYSTEM DESIGN. CALCULATIONS SHALL BE SUBMITTED TO THE ARCHITECT/ENGINEER FOR REVIEW PRIOR TO FABRICATION AND INSTALLATION. THE DESIGN SHALL CONFORM TO THE REQUIREMENTS OF THE LISTED CODES AND THE LISTED DESIGN LOADS. BEAM TO COLUMN AND COLUMN TO FOOTING MOMENT CONNECTIONS SHALL BE UTILIZED AS REQUIRED BY DESIGN TO LIMIT THE SIDE SWAY DEFLECTION OF THE FRAMES TO NO GREATER THAN 1/360 OF THE HEIGHT OF THE COLUMN. THE CALCULATIONS SHALL CLEARLY INDICATE THE LOADS (VERTICAL LOADS, HORIZONTAL LOADS, AND MOMENTS) THAT THE GLULAM MEMBERS WILL IMPOSE ON THE FOOTINGS. SEE SPEC. SECTION 061801.
3. ALL GLULAM TIMBER SHALL BE DESIGNED IN ACCORDANCE WITH THE PROVISIONS OF AITC 117-DESIGN, AITC 119, "THE TIMBER CONSTRUCTION MANUAL AND NATIONAL DESIGN SPECIFICATIONS FOR WOOD CONSTRUCTION" (NDS).
4. TONGUE AND GROOVE LAMINATED WOOD DECKING SHALL BE NOMINAL 3 INCHES THICK, DECORATIVE GRADE, MANUFACTURED FROM SOUTHERN PINE.
5. GLULAM MEMBERS SHALL BE MANUFACTURED FROM SOUTHERN PINE WITH DIMENSIONS AS REQUIRED BY DESIGN. MINIMUM MEMBER SIZES AS SHOWN ON THE PLANS. MEMBER APPEARANCE SHALL MEET THE REQUIREMENTS OF PREMIUM GRADE AS DESCRIBED IN AITC 110.
6. SIZE OF STEEL CONNECTION PLATES AND SHOES AND NUMBER OF BOLTS FOR EACH CONNECTION SHALL BE AS REQUIRED BY DESIGN. ALL CONNECTION PLATES AND SHOES SHALL BE HOT DIPPED GALVANIZED AND PREPARED FOR FINAL FINISH PAINTING.
7. SHOP DRAWINGS OF ALL GLULAM MEMBERS, LAMINATED DECKING, AND ALL CONNECTIONS SHALL BE PREPARED AND SUBMITTED TO THE ARCHITECT/ENGINEER FOR REVIEW. SHOP DRAWINGS SHALL SHOW ALL MEMBER SIZES, ALL CONNECTION DETAILS, AND ALL DIMENSIONS NECESSARY FOR ERECTION OF THE COMPLETE STRUCTURAL SYSTEM. THE SHOP DRAWINGS SHALL BEAR THE SEAL AND SIGNATURE OF THE ENGINEER RESPONSIBLE FOR THE DESIGN OF THE GLULAM STRUCTURAL SYSTEM. STAMPED AND SIGNED DESIGN CALCULATIONS SHALL BE SUBMITTED WITH THE SHOP DRAWINGS (SEE NOTE NUMBER 2 ABOVE). FAILURE TO SUBMIT STAMPED AND SIGNED SHOP DRAWINGS AND STAMPED AND SIGNED DESIGN CALCULATIONS SHALL BE SUFFICIENT CAUSE FOR REJECTION OF THE SHOP DRAWINGS.
8. ALL GLULAM TIMBER MEMBERS SHALL BE MANUFACTURED IN CONFORMANCE WITH ANSI/AITC A190.1, IN FACILITIES INSPECTED BY THE AMERICAN INSTITUTE OF TIMBER CONSTRUCTION. ALL GLULAM MEMBERS SHALL BE ACCOMPANIED BY AN AITC CERTIFICATE OF CONFORMANCE.
9. THE GLULAM TIMBER STRUCTURAL SYSTEM WILL HAVE AN EXTERIOR USE EXPOSURE; THEREFORE ALL GLULAM MEMBERS SHALL BE TREATED WITH A SUITABLE WOOD PRESERVATIVE IN ACCORDANCE WITH AITC 109. THE WOOD PRESERVATIVE SHALL BE SUBJECT TO APPROVAL OF THE ARCHITECT.
10. ALL GLULAM MEMBERS SHALL BE INDIVIDUALLY WRAPPED FOR PROTECTION DURING SHIPPING AND HANDLING.
11. COORDINATE THE GLULAM TIMBER STRUCTURAL SYSTEMS WITH ALL ARCHITECTURAL, MECHANICAL, AND ELECTRICAL REQUIREMENTS.
12. BEFORE STARTING THE WORK, THIS CONTRACTOR SHALL INSPECT AND APPROVE THE FOOTINGS AND FOUNDATIONS FOR ACCEPTANCE. IT IS THE RESPONSIBILITY OF THE FOUNDATION CONTRACTOR TO CORRECT ANY WORK THAT IS NOT ACCEPTABLE TO RECEIVE THE GLULAM TIMBER CONNECTIONS.

CONCRETE PROTECTION FOR REINFORCEMENT IN CAST-IN-PLACE CONCRETE

THE FOLLOWING CONCRETE COVER SHALL BE PROVIDED FOR REINFORCEMENT; UNLESS NOTED OTHERWISE

	COVER, IN.
CONCRETE CAST AGAINST AND PERMANENTLY EXPOSED TO EARTH	3
CONCRETE EXPOSED TO EARTH OR WEATHER	
#6 THROUGH #18 BARS	2
#5 BAR, W31 OR D31 WIRE, AND SMALLER	1 1/2
CONCRETE NOT EXPOSED TO WEATHER OR IN CONTACT WITH GROUND	
SLABS, WALLS, JOIST: #14 AND #18 BARS	1 1/2
#11 BAR AND SMALLER	3/4
BEAMS AND COLUMNS: PRIMARY REINFORCEMENT, TIES, STIRRUPS, SPIRALS	1 1/2

CFED007A

REINFORCEMENT LAP SPLICE LENGTH

(GRADE 60 REINFORCEMENT)

THE FOLLOWING LAP SPLICE SHALL BE PROVIDED FOR REINFORCEMENT; UNLESS NOTED OTHERWISE

	4000 PSI CONCRETE		MASONRY
	TOP BARS	OTHERS	
#3	24"	19"	18"
#4	32"	25"	24"
#5	40"	31"	30"
#6	48"	37"	36"
#7	70"	54"	42"
#8	80"	62"	48"
#9	91"	70"	55"
#10	102"	79"	--
#11	113"	87"	--

(TOP BARS ARE HORIZONTAL BARS WITH MORE THAN 12 IN. OF CONCRETE CAST BELOW THE BARS)

CFED007Q

NOTE: ALL WELDED WIRE FABRIC LAP SPLICES SHALL BE ONE SPACE PLUS 2" (i.e. WWF 6x6 = 8" SPLICE)

MISCELLANEOUS LINTEL (ML) SCHEDULE (SRES009T)

(FOR LINTELS NOT OTHERWISE SHOWN OR NOTED)

BLOCK LINTELS – 8" BEARING EACH END

- 3'-0" WIDE AND LESS USE 8" DP. BOND BEAM WITH (1) #5 BOT.
- 3'-1" WIDE TO 7'-0" WIDE USE 16" DP. BOND BEAM WITH (1) #5 TOP & BOTTOM.
- 7'-1" WIDE TO 11'-0" WIDE USE 16" DP. BOND BEAM WITH (1) #5 TOP & BOT.

STEEL LINTELS

PROVIDE ONE ANGLE FOR EVERY FOUR INCHES OF WIDTH

- 8" WALL = 2 ANGLES
- 12" WALL = 3 ANGLES
- 16" WALL = 4 ANGLES

- 4'-0" WIDE AND LESS USE ANGLE 4x3 1/2x5/16 W/ 8" BRG. EA. END
- 4'-1" WIDE TO 6'-0" USE ANGLE 5x3 1/2x5/16 W/ 8" BRG. EA. END
- 6'-1" WIDE TO 9'-0" USE ANGLE 6x3 1/2x5/16 W/ 8" BRG. EA. END
- 9'-1" WIDE TO 11'-0" USE ANGLE 6x3 1/2x3/8 W/ 12" BRG. EA. END

PROVIDE GALVANIZED STEEL WHERE LINTELS ARE EXPOSED TO WEATHER, COORDINATE WITH ARCHITECTURAL DRAWINGS & DETAILS

LEGEND & ABBREVIATIONS

- TYP = TYPICAL
- N.S. = NEAR SIDE
- F.S. = FAR SIDE
- O.C. = ON CENTER
- CMU = CONCRETE MASONRY UNIT
- T/ = TOP OF
- CLR = CLEAR
- U.N.O.= UNLESS NOTED OTHERWISE
- T&G = TONGUE AND GROOVE
- P.T. = PRESSURE TREATED
- HKB = HILTI KWIK BOLT 3
- CEA = CONCRETE EXPANSION ANCHOR
- LVL = LAMINATED VENEER LUMBER
- PSL = PARALLEL STRAND LUMBER
- GT = GIRDER TRUSS
- ALT = ALTERNATE
- EA = EACH
- W/ = WITH
- CLR COV = CLEAR COVER
- HT = HEADER TRUSS
- CFS = COLD FORMED STEEL
- T/B = TOP OF BEAM

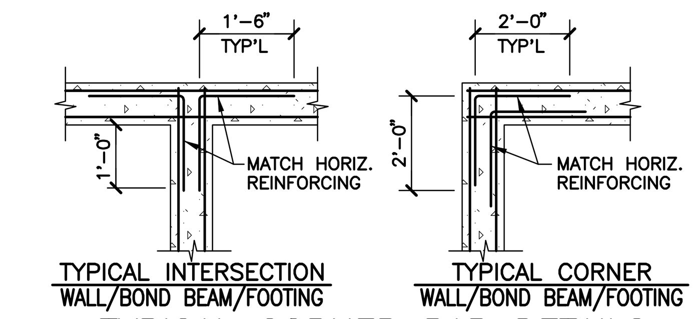

TYPICAL CORNER BAR DETAILS

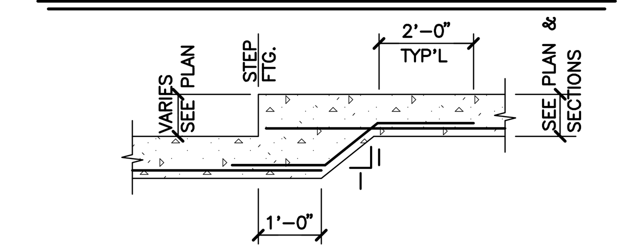

TYPICAL STEP FTG. DETAIL

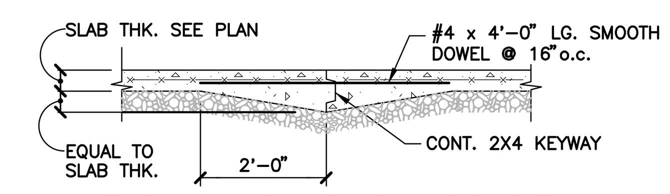

TYPICAL SLAB ON GRADE CONSTRUCTION JOINT DETAIL

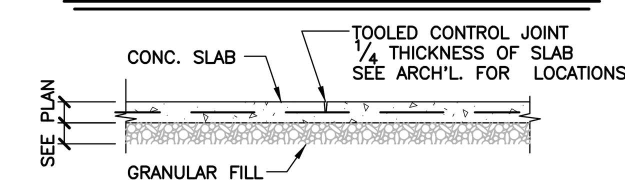

TYPICAL SLAB ON GRADE CONTROL JOINT DETAIL

CFDS003R

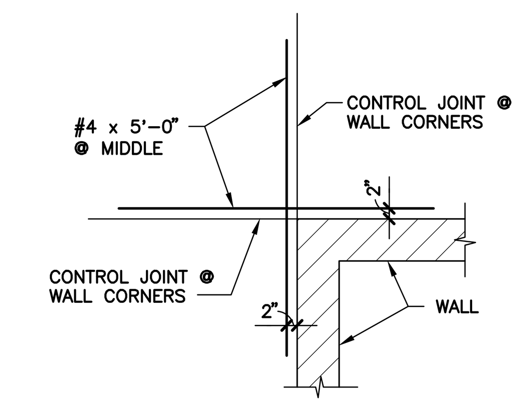

TYPICAL WALL CORNER

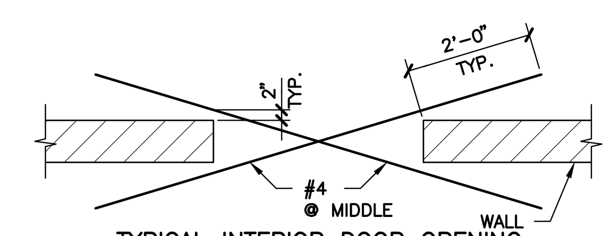

TYPICAL INTERIOR DOOR OPENING

TYPICAL SLAB REINFORCING DETAILS

CFDP067

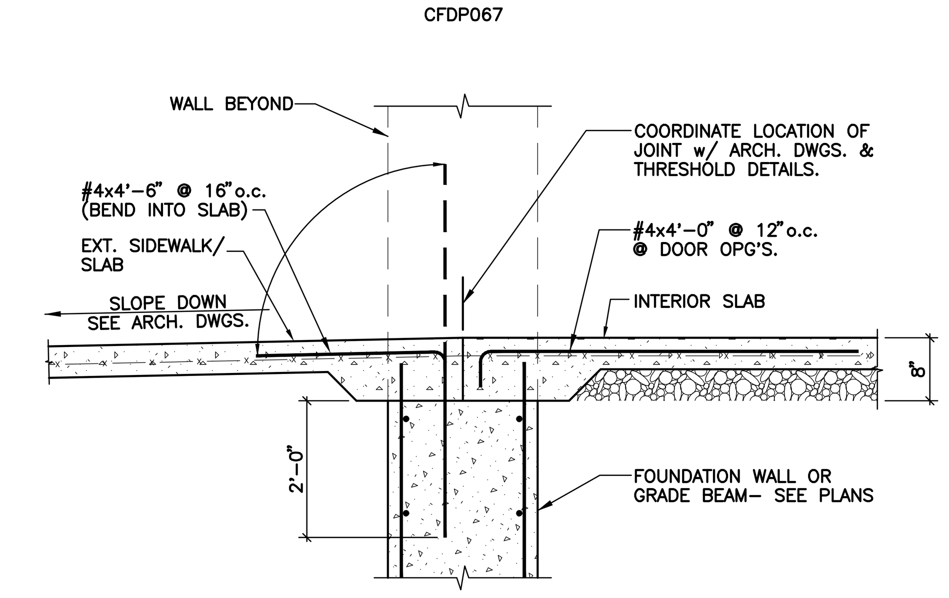

TYP. SECTION @ THRESHOLD

SCALE: N.T.S.

MLES027A

Seals
CARL J. SLESSER #10694 LICENSED PROFESSIONAL ENGINEER
5/23/13

Architecture Engineering Planning
QK4
815 West Market Street, Suite 300 Louisville, Kentucky 40202
Phone: 502-585-2222 Facsimile: 502-992-0605 Internet: www.qk4.com
Kentucky · Indiana · Georgia · West Virginia · Tennessee · Florida

STRUCTURAL ENGINEERS
SE SLESSER ENGINEERING, INC.
STRUCTURAL ENGINEERS
2325 LIME KILN LANE
LOUISVILLE, KENTUCKY 40222

Architect
BRAVURA
111 West Washington Street
Louisville, Kentucky 40202
T: (502) 584-9900
F: (502) 584-0829

The Parklands of Floyds Fork, Project 4A

The Strand, Turkey Run Park and Broad Run Park

Louisville, Kentucky

Owner:
21st Century Parks, Inc.
371 W. Main St., Suite 202
Louisville, Kentucky 40202

REV #	DATE	DESCRIPTION
	05/08/2013	ISSUED FOR BID
1	05/23/2013	ADDENDUM #1: REVISED TITLE TO READ, "ADD-ALT. NO.2"

Job No:	155-617
Date:	May 23, 2013
Scale:	As Shown
Drawn By:	GWM

ISSUED FOR ADDENDUM #1

Drawing Title:

Parklands of Floyds Fork
ADD-ALT. NO.2
PROJECT 4A
The Strand
2-Hole Trailhead
Gen. Notes & Typ. Dtls.

Drawing No:

S1-001

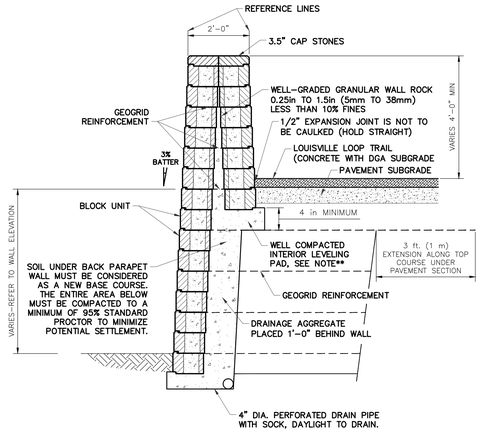

NOTES:
1. ALL SEGMENT LENGTHS ARE MEASURED ALONG THE REFERENCE LINE AND FRONT FACE OF TOP BLOCK.
2. ALL OFFSETS ARE TO THE REFERENCE LINE AND FRONT FACE OF TOP BLOCK.
3. THE MAXIMUM FACTORED SOIL BEARING RESISTANCE FOR WALL 2 =3.0 KSF. FOR DESIGN SOIL PARAMETERS, SEE THE GEOTECHNICAL REPORT.
4. THE WALL BLOCK SYSTEM SHALL BE THE AB CLASSIC SERIES AS MANUFACTURED BY ALLAN BLOCK, OR APPROVED EQUAL.
5. 4" DIAMETER PERFORATED PIPE TO RUN LENGTH OF WALL SLOPE 2% MINIMUM DOWNWARD AND TERMINATE WHERE IT DAYLIGHTS AT EXISTING SIDE SLOPE.

ALLAN BLOCK SEGMENTED WALL SECTION TYPE 1 (AB1)

SCALE: 1/2"=1'

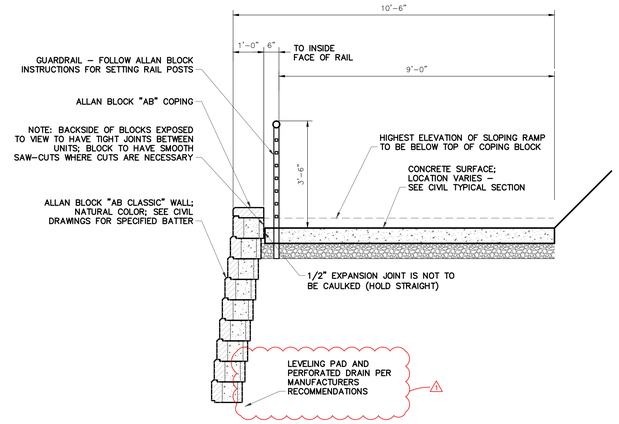

ALLAN BLOCK SEGMENTED WALL SECTION TYPE 2 (AB2)

SCALE: 1/2"=1'

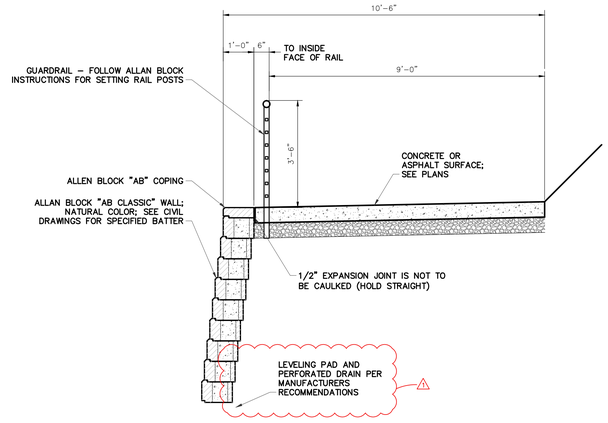

ALLAN BLOCK SEGMENTED WALL SECTION TYPE 3 (AB3)

SCALE: 1/2"=1'

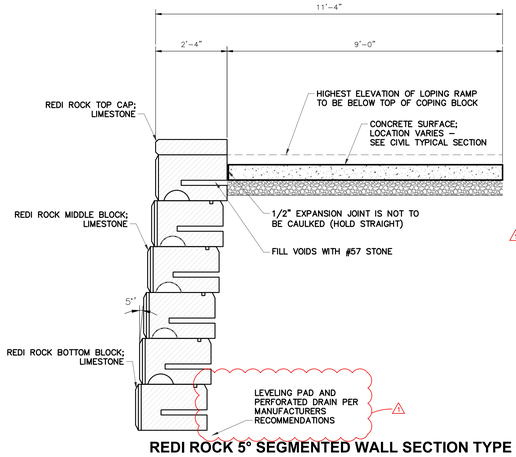

REDI ROCK 5° SEGMENTED WALL SECTION TYPE 1 (RR1)

SCALE: 1/2"=1'

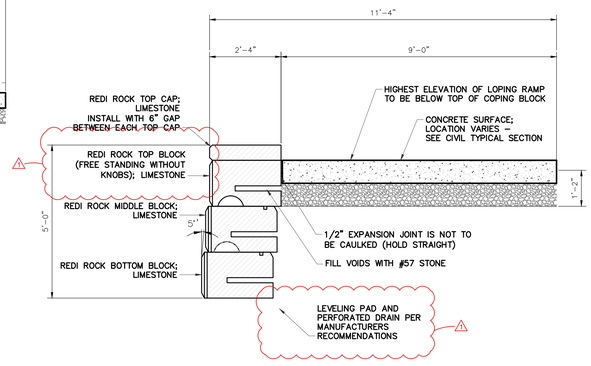

REDI ROCK 5° SEGMENTED WALL SECTION TYPE 2 (RR2)

SCALE: 1/2"=1'

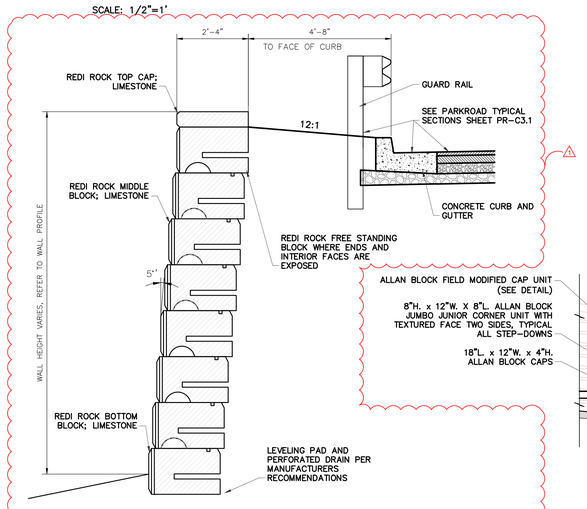

REDI ROCK 5° SEGMENTED WALL SECTION TYPE 3 (RR3)

SCALE: 1/2"=1'

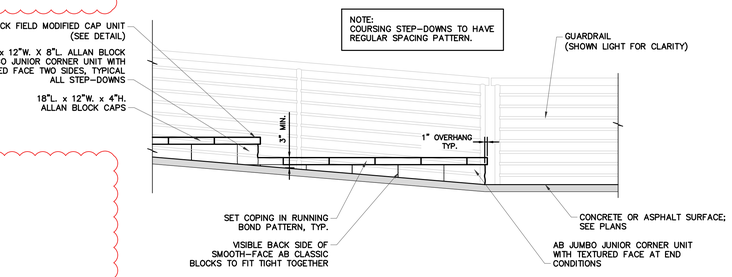

SEGMENTED RETAINING WALL ELEVATION

SCALE: 1/2"=1'

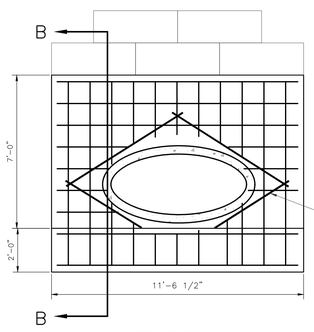

PIPE LOCATION SHOWN AT THE FACE OF THE HEADWALL IS APPROXIMATE. EXACT LOCATION OF THE PIPE CENTERLINE WITH RESPECT TO THE HEADWALL TO BE DETERMINED IN THE FIELD

CUT REBAR AND PLACE AROUND THE PIPE OPENING AS SHOWN. PROVIDE A MINIMUM OF 3" CLEARANCE BETWEEN THE PIPE WALL AND THE REINFORCING BARS

FRONT VIEW

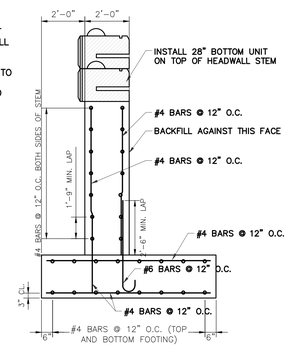

SECTION B-B

24" x 38" R.E.C.P. PIPE HEADWALL FOR "RR" TYPE WALL

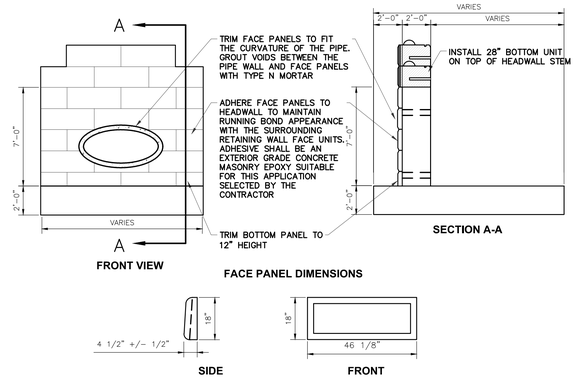

FRONT VIEW

FACE PANEL DIMENSIONS

SECTION A-A

SIDE

FRONT

HEADWALL FACING PANEL INSTALLATION FOR "RR" TYPE WALL

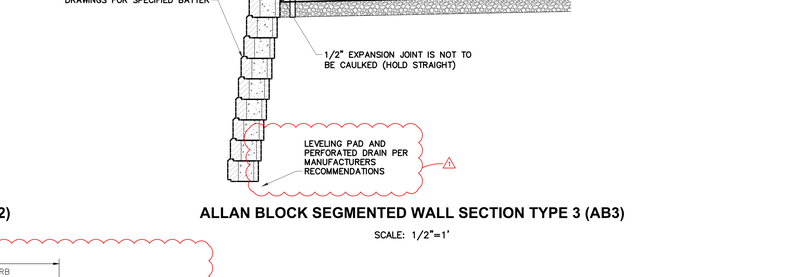

TYPICAL RAILING DETAIL

SCALE: 1/2"=1'

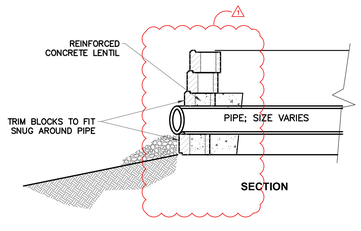

SECTION

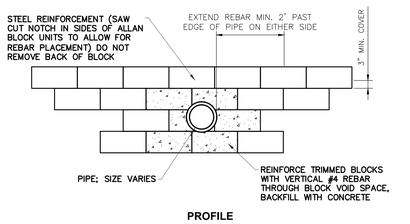

PROFILE

PIPE HEADWALL FOR "AB" TYPE WALL

Seals

STATE OF KENTUCKY ROBERT D. MARTIN 15958 LICENSED PROFESSIONAL ENGINEER
5/8/13

Engineering
Planning

1046 East Chestnut Street, Louisville, Kentucky 40204
Indiana • Kentucky • Georgia • Tennessee • Florida

LANDSCAPE ARCHITECT
Wallace Roberts & Todd, LLC
1700 Market Street
28th Floor
Philadelphia, PA 19103
tel 215.732.5215
fax 215.732.2551

Architect
BRAVURA
111 West Washington Street
Louisville, Kentucky 40202
T: (502) 584-0900
F: (502) 584-0829

The Parklands of Floyds Fork, Project 4A

The Strand, Turkey Run Park and Broad Run
Louisville, Kentucky

Owner:
21st Century Parks, Inc.
371 W. Main St., Suite 202
Louisville, Kentucky 40202

REV #	DATE	DESCRIPTION
1	05-23-2013	Removed reference to Add-All 2. Added RR3 detail

Job No: 12300.4AC
Date: May 8, 2013
Scale:
Drawn By:

BID SET

Drawing Title:
Parklands of Floyds Fork
PROJECT 4A
Retaining Wall
Typical Sections

Drawing No:
RW-C2.1

May 23, 2013 - 9:50am
u:\12300.4AC - 21st Century Parks Phase 4A\SITE\Dwgs\Civil\12300.4AC-RETAINING WALLS-DTL.dwg (RW-C2.1)

GENERAL SIGN POST/CAPS NOTES:

1. ALL POST SHALL HAVE MINIMUM THICKNESS OF 14 GAUGE, ASTM A-500 GRADE B.
2. PAINT COLOR FOR POSTS AND CAPS SHALL BE SW-7048 URBAN BRONZE OR APPROVED EQUAL.
3. POST CAP SHALL BE MADE OF CAST IRON, SAF-TI-CO PRODUCT #STC 212PCP OR APPROVED EQUAL..

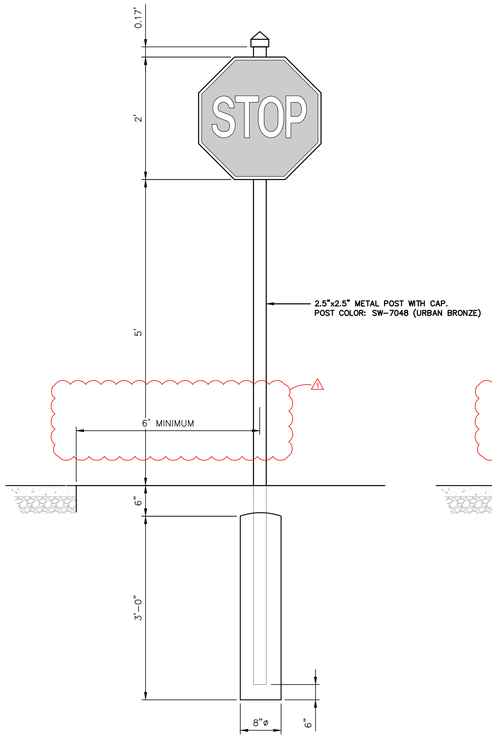

STOP SIGN
DETAIL 1
SCALE: NONE
RS SERIES RS-C3.1

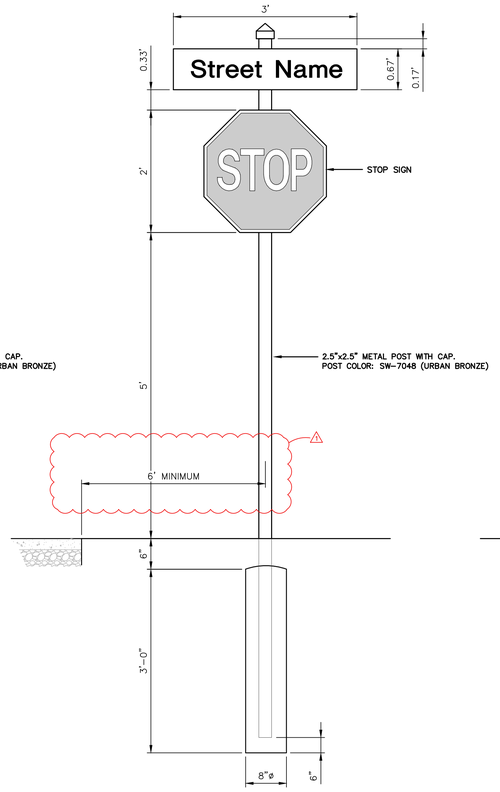

STOP SIGN WITH STREET SIGN
DETAIL 2
SCALE: NONE
RS SERIES RS-C3.1

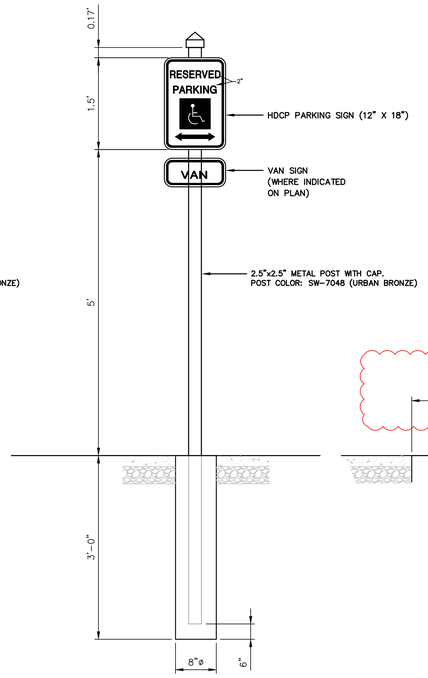

HC VAN PARKING SIGN
DETAIL 3
SCALE: NONE
RS SERIES RS-C3.1

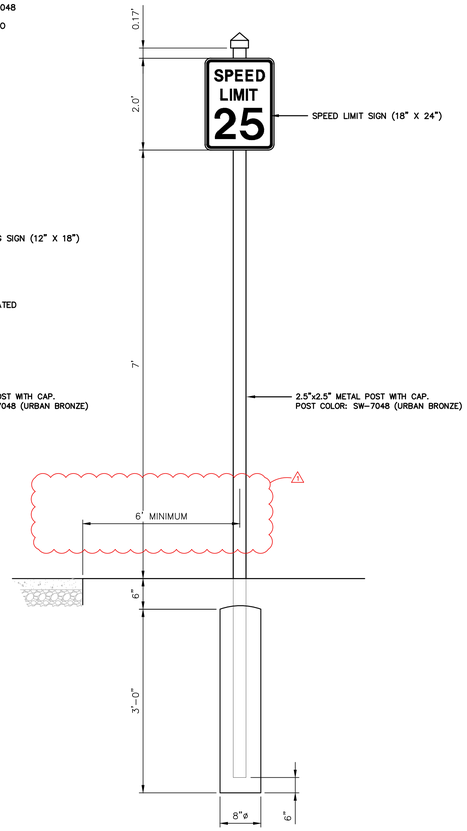

SPEED LIMIT SIGN
DETAIL 4
SCALE: NONE
RS SERIES RS-C3.1

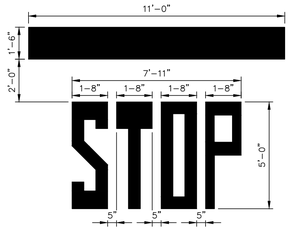

NOTES:
1. STOP BAR AND "STOP" LETTERS TO BE SOLID WHITE REFLECTIVE THERMOPLASTIC PER MUTCD, PER DIMENSIONS SHOWN.
2. STOP BARS SHOULD BE PLACED 4 FEET FROM THE NEAREST EDGE OF THE INTERSECTING TRAVELED WAY.

STOP BAR
DETAIL 5
SCALE: NONE
RS SERIES RS-C3.1

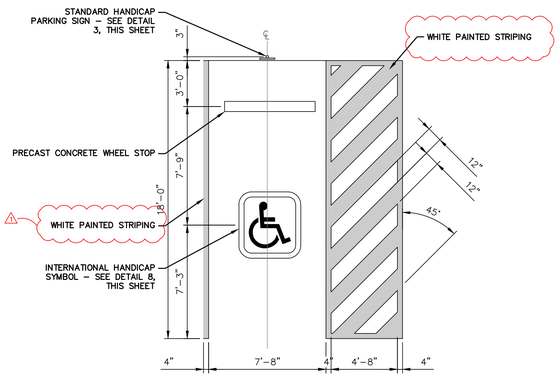

STANDARD HANDICAP PARKING
DETAIL 6
SCALE: NONE
RS SERIES RS-C3.1

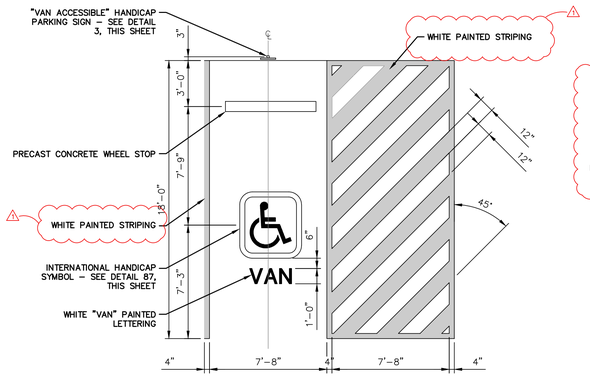

VAN ACCESSIBLE HANDICAP PARKING
DETAIL 7
SCALE: NONE
RS SERIES RS-C3.1

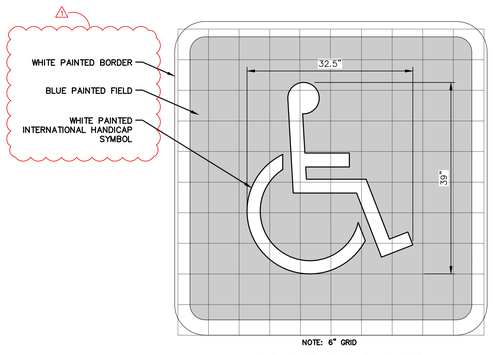

NOTE: ALL COMPONENTS OF HANDICAP SYMBOL SHALL BE THERMO PLASTIC

INTERNATIONAL HANDICAP SYMBOL
DETAIL 8
SCALE: NONE
RS SERIES RS-C3.1

Seals

STATE OF KENTUCKY
ROBERT D. MARTIN
15958
LICENSED
PROFESSIONAL ENGINEER
Robert D. Martin 5/8/13

Engineering
Planning
1046 East Chestnut Street, Louisville, Kentucky 40204
Phone: 502.584.9900 Fax: 502.584.9229
Kentucky • Indiana • Georgia • Tennessee • Florida

LANDSCAPE ARCHITECT
WRT
Wallace Roberts & Todd, LLC
1700 Market Street
28th Floor
Philadelphia, PA 19103
tel 215.732.5215
fax 215.732.2551

Architect
BRAVURA
111 West Washington Street
Louisville, Kentucky 40202
T: (502) 584-9900
F: (502) 584-0829

The Parklands of Floyds Fork, Project 4A
The Strand, Turkey Run Park and Broad Run
Louisville, Kentucky

Owner:
21st Century Parks, Inc.
371 W. Main St., Suite 202
Louisville, Kentucky 40202

REV #	DATE	DESCRIPTION
1	05-23-2013	Addendum #1: Clarified Thermoplastic and paint applications and sign post placement

Job No:	12300.4AC
Date:	May 8, 2013
Scale:	1" = 100'
Drawn By:	

BID SET

Drawing Title:
Parklands of Floyds Fork
Details
PROJECT 4A
Regulatory
Signage and
Striping Plan

Drawing No:
RS-C3.1

May 21, 2013 – 5:45pm
C:\Users\jhoss\appdata\local\temp\AcPublish_6712\12300AC-SIGNAGE AND STRIPING.dwg (RS-C3.1)

Plan Enlargement "A"

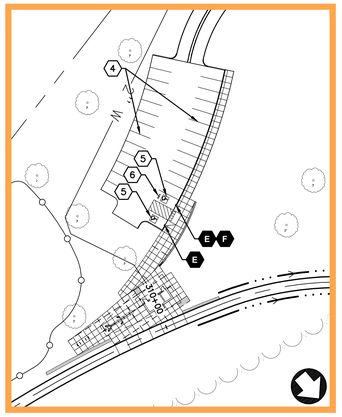

Plan Enlargement "B"

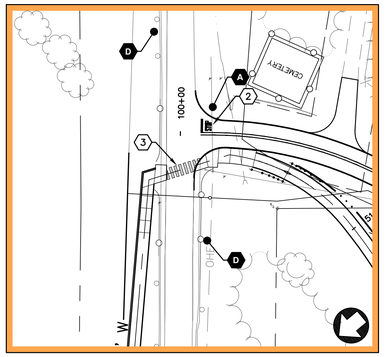

Plan Enlargement "C"

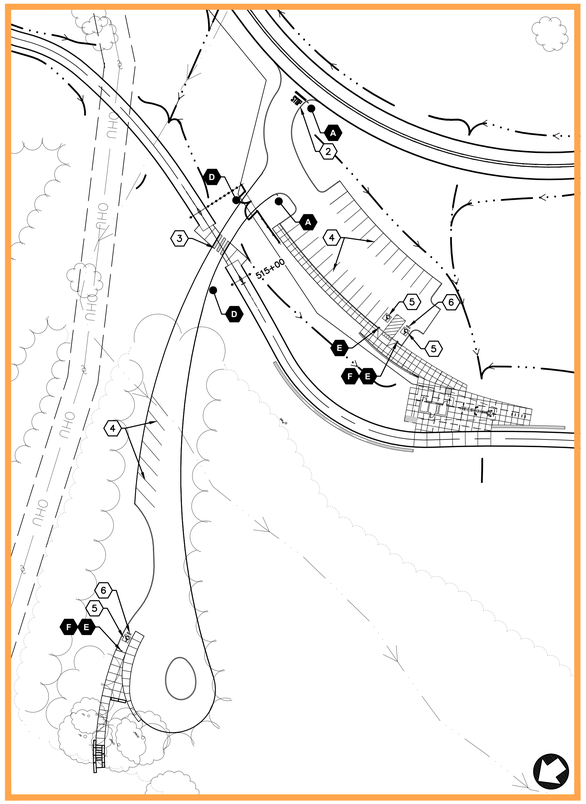

Plan Enlargement "D"

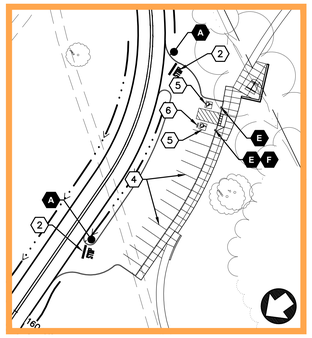

Plan Enlargement "E"

Cannot draw reference system - no coordinate system assigned

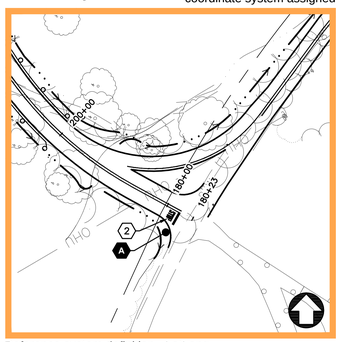

Reference system definition - LatLong

Plan Enlargement "F"

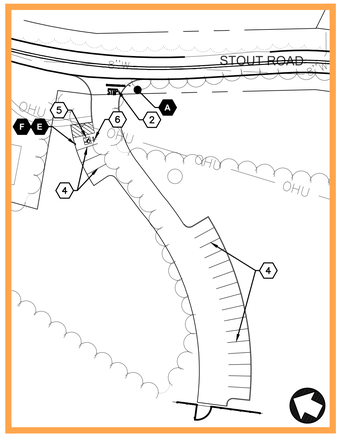

Plan Enlargement "G"

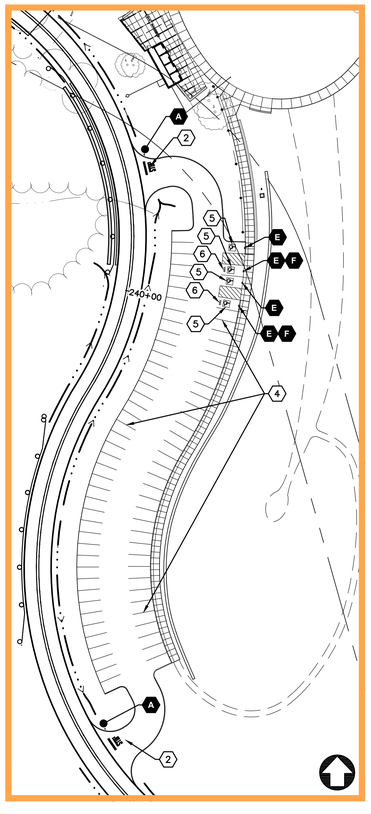

Plan Enlargement "H"

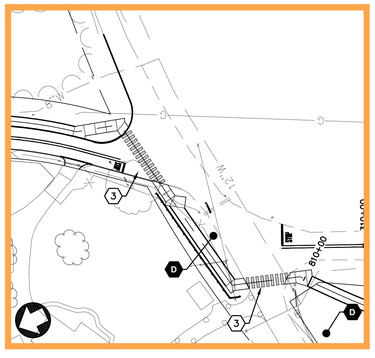

Plan Enlargement "I"

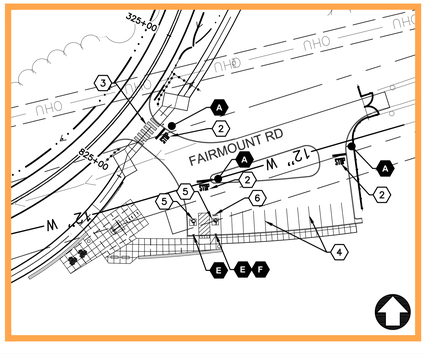

Plan Enlargement "J"

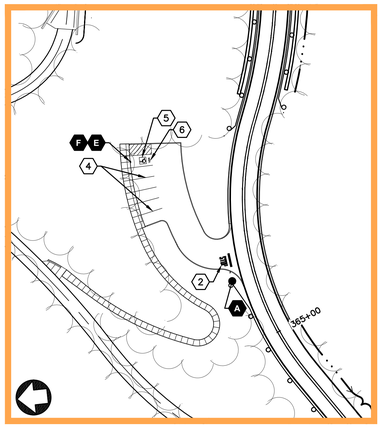

Plan Enlargement "K"

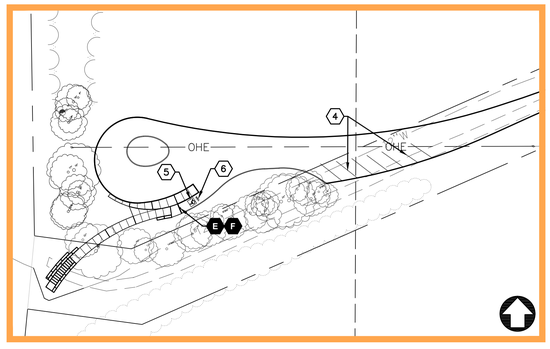

Plan Enlargement "L"

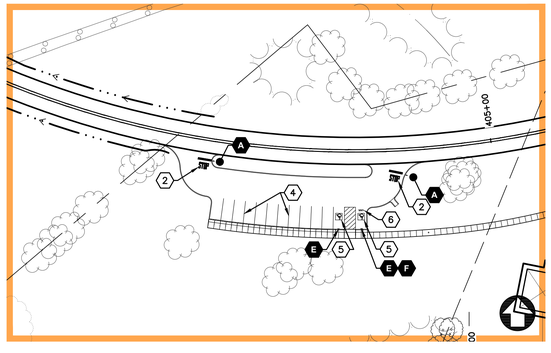

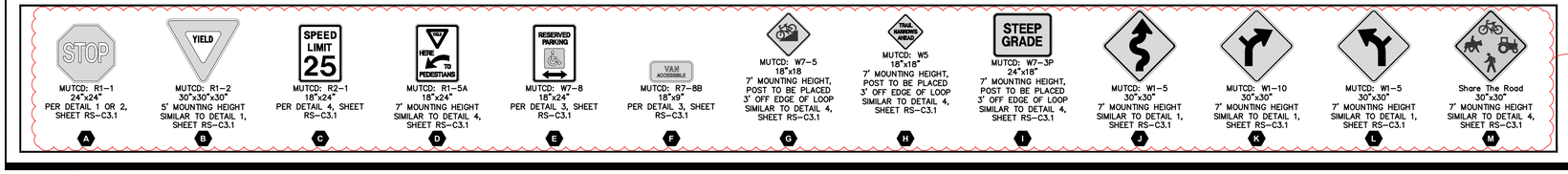

KEYNOTES (Striping)

1. DOUBLE YELLOW THERMOPLASTIC CENTERLINE STRIP WHERE INDICATED ON PLAN AND IN ACCORDANCE WITH THE MUTCD.
2. 18" THERMOPLASTIC STOP BAR AND "STOP" LETTERS. STRIPING TO BE SOLID WHITE REFLECTIVE PER MUTCD. STOP BARS SHOULD BE PLACED 4 FEET FROM THE NEAREST EDGE OF THE INTERSECTION TRAVELED WAY. SEE DETAIL 5, SHEET RW-C3.1.
3. 18" SOLID WHITE THERMOPLASTIC ALTERNATING CROSSWALK BARS WHERE INDICATED ON PLAN. BARS ARE TO BE 18" WIDE AND SPACED 4' ON CENTER.
4. PAINT WHITE PARKING STALL STRIPING WITH WHITE PAINT WHERE INDICATED ON PLAN, AND IN ACCORDANCE WITH SECTION 842 OF THE KENTUCKY DEPARTMENT OF TRANSPORTATION STANDARD SPECIFICATIONS FOR ROAD AND BRIDGE CONSTRUCTION.
5. PAINT BLUE STANDARD ACCESSIBLE PARKING STALL STRIPING ON ASPHALT PAVEMENT WHERE INDICATED ON PLAN AND PER DETAIL 6 AND DETAIL 8, SHEET RW-C3.1.
6. PAINT BLUE "VAN ACCESSIBLE" PARKING STALL STRIPING ON ASPHALT PAVEMENT WHERE INDICATED ON PLAN AND PER DETAIL 6 AND DETAIL 7, SHEET RW-C3.1.

0 100' 200'

Seals

STATE OF KENTUCKY
ROBERT D. MARTIN
15958
LICENSED
PROFESSIONAL ENGINEER
Robert D. Martin 5/8/13

Engineering
Planning
1046 East Chestnut Street, Louisville, Kentucky 40204
Phone: 502.584.6292 Facsimile: 502.584.6299
Kentucky • Indiana • Georgia • Tennessee • Florida

LANDSCAPE ARCHITECT
WRT
Wallace Roberts & Todd, LLC
1700 Market Street
28th Floor
Philadelphia, PA 19103
tel 215.732.5215
fax 215.732.2551

Architect
BRAVURA
111 West Washington Street
Louisville, Kentucky 40202
T: (502) 584-9900
F: (502) 584-0829

The Parklands of Floyds Fork, Project 4A

The Strand, Turkey Run Park and Broad Run
Louisville, Kentucky

Owner:
21st Century Parks, Inc.
371 W. Main St., Suite 202
Louisville, Kentucky 40202

REV #	DATE	DESCRIPTION
1	09-23-2013	Addendum #1. Added detail references

Job No:	12300.4AC
Date:	May 8, 2013
Scale:	1" = 100'
Drawn By:	

BID SET

Drawing Title:

Parklands of Floyds Fork

Plan Enlargements
PROJECT 4A
Regulatory Signage and Striping Plan

Drawing No:

RS-C2.1

May 21, 2013 – 5:45pm
C:\Users\local appdata\local\temp\AcPublish_6712\123004AC-SIGNAGE AND STRIPING.dwg (RS-C2.1)

KEYNOTES (Striping)

1. DOUBLE YELLOW THERMOPLASTIC CENTERLINE STRIP WHERE INDICATED ON PLAN AND IN ACCORDANCE WITH THE MUTCD.
2. 18" THERMOPLASTIC STOP BAR AND "STOP" LETTERS. STRIPING TO BE SOLID WHITE REFLECTIVE PER MUTCD. STOP BARS SHOULD BE PLACED 4 FEET FROM THE NEAREST EDGE OF THE INTERSECTION TRAVELED WAY. SEE DETAIL 5, SHEET RW-C3.1.
3. 18" SOLID WHITE THERMOPLASTIC ALTERNATING CROSSWALK BARS WHERE INDICATED ON PLAN. BARS ARE TO BE 18" WIDE AND SPACED 4' ON CENTER.
4. PAINT WHITE PARKING STALL STRIPING WITH WHITE PAINT WHERE INDICATED ON PLAN, AND IN ACCORDANCE WITH SECTION 842 OF THE KENTUCKY DEPARTMENT OF TRANSPORTATION STANDARD SPECIFICATIONS FOR ROAD AND BRIDGE CONSTRUCTION.
5. PAINT BLUE STANDARD ACCESSIBLE PARKING STALL STRIPING ON ASPHALT PAVEMENT WHERE INDICATED ON PLAN AND PER DETAIL 6 AND DETAIL 8, SHEET RW-C3.1.
6. PAINT BLUE "VAN ACCESSIBLE" PARKING STALL STRIPING ON ASPHALT PAVEMENT WHERE INDICATED ON PLAN AND PER DETAIL 6 AND DETAIL 7, SHEET RW-C3.1.

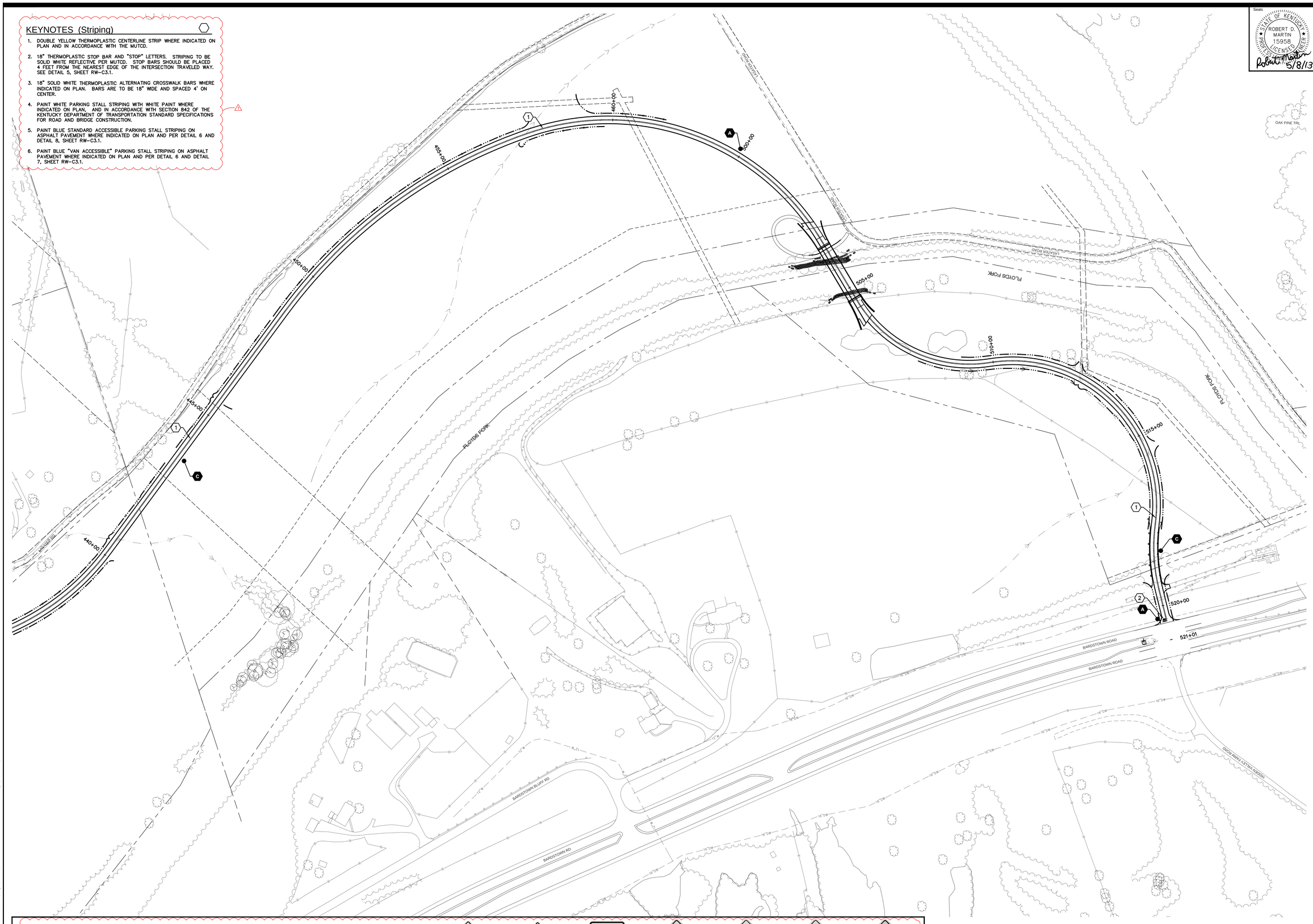

STOP	YIELD	SPEED LIMIT 25	ONLY HERE TO PEDESTRIANS	RESERVED PARKING	VAN ACCESSIBLE		TRAIL NARROWS AHEAD	STEEP GRADE				
MUTCD: R1-1 24"x24" PER DETAIL 1 OR 2, SHEET RS-C3.1	MUTCD: R1-2 30"x30"x30" 5' MOUNTING HEIGHT SIMILAR TO DETAIL 1, SHEET RS-C3.1	MUTCD: R2-1 18"x24" PER DETAIL 4, SHEET RS-C3.1	MUTCD: R1-5A 18"x24" 7' MOUNTING HEIGHT SIMILAR TO DETAIL 4, SHEET RS-C3.1	MUTCD: W7-8 18"x24" PER DETAIL 3, SHEET RS-C3.1	MUTCD: R7-8B 18"x9" PER DETAIL 3, SHEET RS-C3.1	MUTCD: W7-5 18"x18 7' MOUNTING HEIGHT, POST TO BE PLACED 3' OFF EDGE OF LOOP SIMILAR TO DETAIL 4, SHEET RS-C3.1	MUTCD: W5 18"x18" 7' MOUNTING HEIGHT, POST TO BE PLACED 3' OFF EDGE OF LOOP SIMILAR TO DETAIL 4, SHEET RS-C3.1	MUTCD: W7-3P 24"x18" 7' MOUNTING HEIGHT, POST TO BE PLACED 3' OFF EDGE OF LOOP SIMILAR TO DETAIL 4, SHEET RS-C3.1	MUTCD: W1-5 30"x30" 7' MOUNTING HEIGHT SIMILAR TO DETAIL 1, SHEET RS-C3.1	MUTCD: W1-10 30"x30" 7' MOUNTING HEIGHT SIMILAR TO DETAIL 1, SHEET RS-C3.1	MUTCD: W1-5 30"x30" 7' MOUNTING HEIGHT SIMILAR TO DETAIL 1, SHEET RS-C3.1	Share The Road 30"x30" 7' MOUNTING HEIGHT SIMILAR TO DETAIL 4, SHEET RS-C3.1
A	B	C	D	E	F	G	H	I	J	K	L	M

0 100' 200'

Key Plan

Seals

STATE OF KENTUCKY ROBERT D. MARTIN 15958 LICENSED PROFESSIONAL ENGINEER

5/8/13

Engineering
Planning

1046 East Chestnut Street, Louisville, Kentucky 40204
Phone: (502) 584-9900 Fax: (502) 584-0829
Kentucky • Indiana • Georgia • Tennessee • Florida

LANDSCAPE ARCHITECT
WRT
Wallace Roberts & Todd, LLC
1700 Market Street
28th Floor
Philadelphia, PA 19103
tel 215.732.5215
fax 215.732.2551

Architect
BRAVURA
111 West Washington Street
Louisville, Kentucky 40202
T: (502) 584-9900
F: (502) 584-0829

The Parklands of Floyds Fork, Project 4A

The Strand, Turkey Run Park and Broad Run
Louisville, Kentucky

Owner:
21st Century Parks, Inc.
371 W. Main St., Suite 202
Louisville, Kentucky 40202

REV #	DATE	DESCRIPTION
1	09-23-2013	Addendum #1. Added detail references

Job No:	12300.4AC
Date:	May 8, 2013
Scale:	1" = 100'
Drawn By:	

BID SET

Drawing Title:

Parklands of Floyds Fork

PROJECT 4A
Regulatory
Signage and
Striping Plan

Drawing No:

RS-C1.12

May 21, 2013 - 5:33pm
J:\12300.4AC - 21st Century Parks Phase 4A\SITE\Dwgs\CDs\12300.4AC-SIGNAGE AND STRIPING.dwg (RS-C1.12)

KEYNOTES (Striping)

1. DOUBLE YELLOW THERMOPLASTIC CENTERLINE STRIP WHERE INDICATED ON PLAN AND IN ACCORDANCE WITH THE MUTCD.
2. 18" THERMOPLASTIC STOP BAR AND "STOP" LETTERS. STRIPING TO BE SOLID WHITE REFLECTIVE PER MUTCD. STOP BARS SHOULD BE PLACED 4 FEET FROM THE NEAREST EDGE OF THE INTERSECTION TRAVELED WAY. SEE DETAIL 5, SHEET RW-C3.1.
3. 18" SOLID WHITE THERMOPLASTIC ALTERNATING CROSSWALK BARS WHERE INDICATED ON PLAN. BARS ARE TO BE 18" WIDE AND SPACED 4' ON CENTER.
4. PAINT WHITE PARKING STALL STRIPING WITH WHITE PAINT WHERE INDICATED ON PLAN, AND IN ACCORDANCE WITH SECTION 842 OF THE KENTUCKY DEPARTMENT OF TRANSPORTATION STANDARD SPECIFICATIONS FOR ROAD AND BRIDGE CONSTRUCTION.
5. PAINT BLUE STANDARD ACCESSIBLE PARKING STALL STRIPING ON ASPHALT PAVEMENT WHERE INDICATED ON PLAN AND PER DETAIL 6 AND DETAIL 8, SHEET RW-C3.1.
6. PAINT BLUE "VAN ACCESSIBLE" PARKING STALL STRIPING ON ASPHALT PAVEMENT WHERE INDICATED ON PLAN AND PER DETAIL 6 AND DETAIL 7, SHEET RW-C3.1.

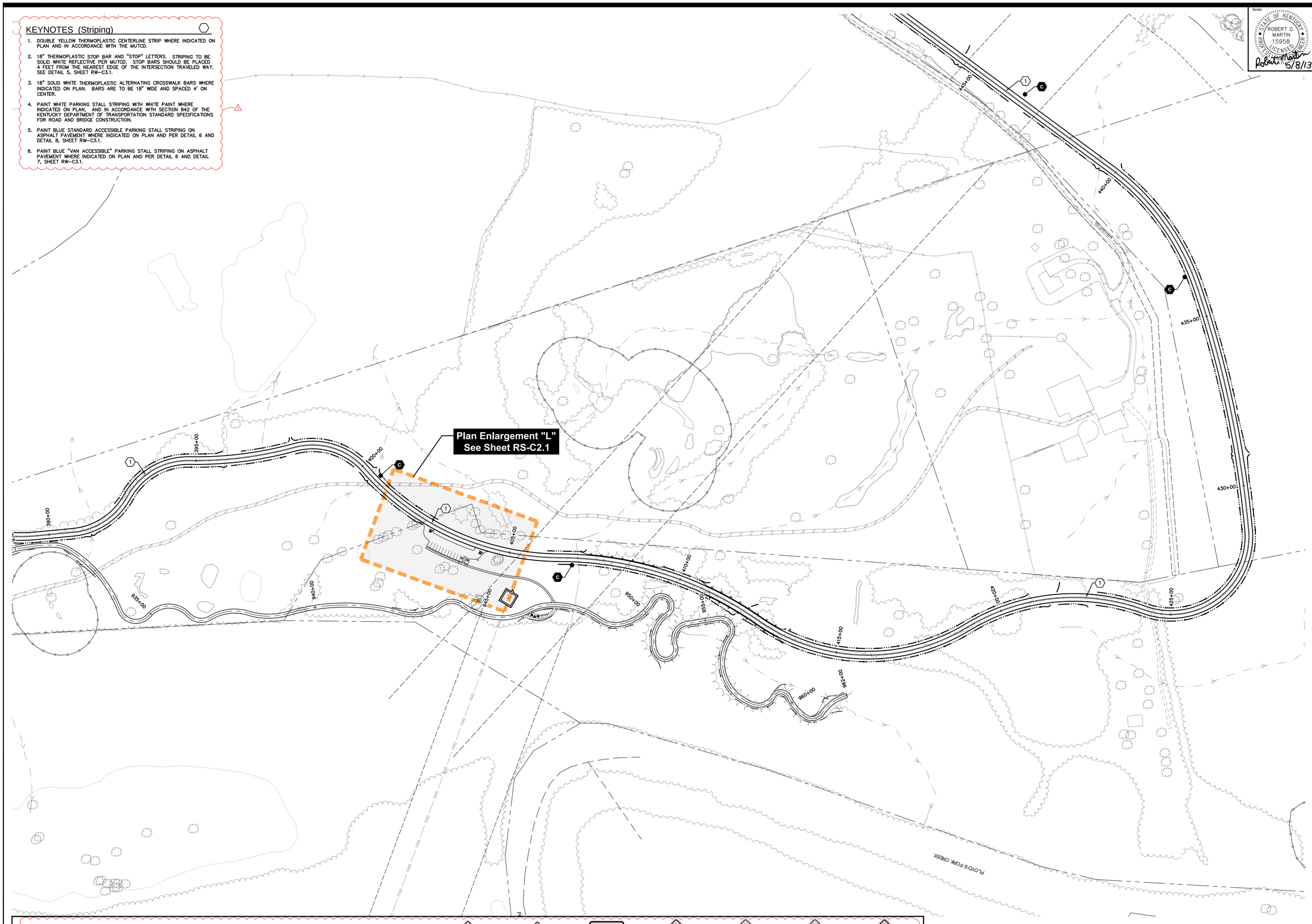

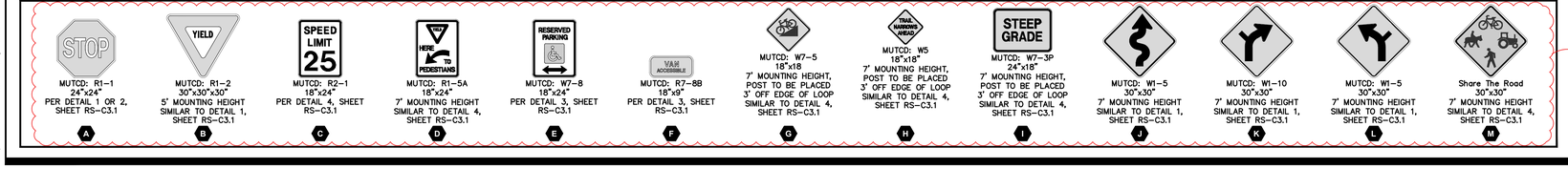

A	MUTCD: R1-1 24"x24" PER DETAIL 1 OR 2, SHEET RS-C3.1
B	MUTCD: R1-2 30"x30"x30" 5' MOUNTING HEIGHT SIMILAR TO DETAIL 1, SHEET RS-C3.1
C	MUTCD: R2-1 18"x24" PER DETAIL 4, SHEET RS-C3.1
D	MUTCD: R1-5A 18"x24" 7' MOUNTING HEIGHT SIMILAR TO DETAIL 4, SHEET RS-C3.1
E	MUTCD: W7-8 18"x24" PER DETAIL 3, SHEET RS-C3.1
F	MUTCD: R7-8B 18"x9" PER DETAIL 3, SHEET RS-C3.1
G	MUTCD: W7-5 18"x18 7' MOUNTING HEIGHT, POST TO BE PLACED 3' OFF EDGE OF LOOP SIMILAR TO DETAIL 4, SHEET RS-C3.1
H	MUTCD: W5 18"x18" 7' MOUNTING HEIGHT, POST TO BE PLACED 3' OFF EDGE OF LOOP SIMILAR TO DETAIL 4, SHEET RS-C3.1
I	MUTCD: W7-3P 24"x18" 7' MOUNTING HEIGHT, POST TO BE PLACED 3' OFF EDGE OF LOOP SIMILAR TO DETAIL 4, SHEET RS-C3.1
J	MUTCD: W1-5 30"x30" 7' MOUNTING HEIGHT SIMILAR TO DETAIL 1, SHEET RS-C3.1
K	MUTCD: W1-10 30"x30" 7' MOUNTING HEIGHT SIMILAR TO DETAIL 1, SHEET RS-C3.1
L	MUTCD: W1-5 30"x30" 7' MOUNTING HEIGHT SIMILAR TO DETAIL 1, SHEET RS-C3.1
M	Share The Road 30"x30" 7' MOUNTING HEIGHT SIMILAR TO DETAIL 4, SHEET RS-C3.1

0 100' 200'

Key Plan

Seals

STATE OF KENTUCKY
ROBERT D. MARTIN
15958
LICENSED
PROFESSIONAL ENGINEER
Robert D. Martin 5/8/13

Engineering
Planning
1046 East Chestnut Street, Louisville, Kentucky 40204
Phone: 502.584.6292 www.mindstudio.com
Kentucky • Indiana • Georgia • Tennessee • Florida

LANDSCAPE ARCHITECT
WRT
Wallace Roberts & Todd, LLC
1700 Market Street
28th Floor
Philadelphia, PA 19103
tel 215.732.5215
fax 215.732.2551

Architect
BRAVURA
111 West Washington Street
Louisville, Kentucky 40202
T: (502) 584-9900
F: (502) 584-0829

The Parklands of Floyds Fork, Project 4A

The Strand, Turkey Run Park and Broad Run
Louisville, Kentucky

Owner:
21st Century Parks, Inc.
371 W. Main St., Suite 202
Louisville, Kentucky 40202

REV #	DATE	DESCRIPTION
1	05-23-2013	Addendum #1; Added detail references

Job No:	12300.4AC
Date:	May 8, 2013
Scale:	1" = 100'
Drawn By:	

BID SET

Drawing Title:

Parklands of Floyds Fork

PROJECT 4A
Regulatory Signage and Striping Plan

Drawing No:

RS-C1.11

May 21, 2013 – 5:32pm
G:\12300.4AC – 21st Century Parks Phase 4A\SITE\Dwgs\CDoc\12300.4AC-SIGNAGE AND STRIPING.dwg (RS-C1.11)

KEYNOTES (Striping)

1. DOUBLE YELLOW THERMOPLASTIC CENTERLINE STRIP WHERE INDICATED ON PLAN AND IN ACCORDANCE WITH THE MUTCD.
2. 18" THERMOPLASTIC STOP BAR AND "STOP" LETTERS. STRIPING TO BE SOLID WHITE REFLECTIVE PER MUTCD. STOP BARS SHOULD BE PLACED 4 FEET FROM THE NEAREST EDGE OF THE INTERSECTION TRAVELED WAY. SEE DETAIL 5, SHEET RW-C3.1.
3. 18" SOLID WHITE THERMOPLASTIC ALTERNATING CROSSWALK BARS WHERE INDICATED ON PLAN. BARS ARE TO BE 18" WIDE AND SPACED 4' ON CENTER.
4. PAINT WHITE PARKING STALL STRIPING WITH WHITE PAINT WHERE INDICATED ON PLAN, AND IN ACCORDANCE WITH SECTION 842 OF THE KENTUCKY DEPARTMENT OF TRANSPORTATION STANDARD SPECIFICATIONS FOR ROAD AND BRIDGE CONSTRUCTION.
5. PAINT BLUE STANDARD ACCESSIBLE PARKING STALL STRIPING ON ASPHALT PAVEMENT WHERE INDICATED ON PLAN AND PER DETAIL 6 AND DETAIL 8, SHEET RW-C3.1.
6. PAINT BLUE "VAN ACCESSIBLE" PARKING STALL STRIPING ON ASPHALT PAVEMENT WHERE INDICATED ON PLAN AND PER DETAIL 6 AND DETAIL 7, SHEET RW-C3.1.

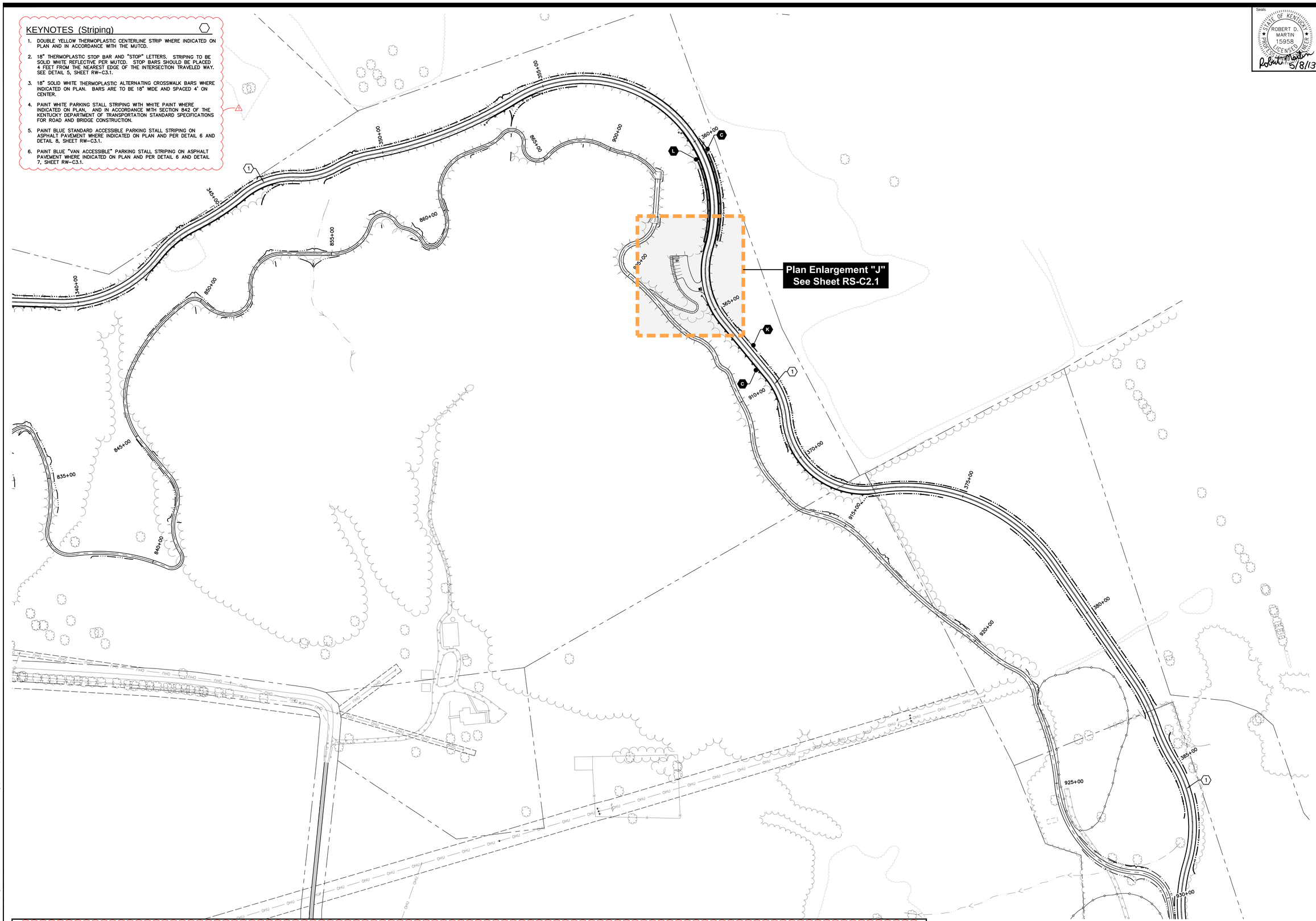

STOP	MUTCD: R1-1 24"x24" PER DETAIL 1 OR 2, SHEET RS-C3.1 (A)
YIELD	MUTCD: R1-2 30"x30"x30" 5' MOUNTING HEIGHT SIMILAR TO DETAIL 1, SHEET RS-C3.1 (B)
SPEED LIMIT 25	MUTCD: R2-1 18"x24" PER DETAIL 4, SHEET RS-C3.1 (C)
HERE TO PEDESTRIANS	MUTCD: R1-5A 18"x24" 7' MOUNTING HEIGHT SIMILAR TO DETAIL 4, SHEET RS-C3.1 (D)
RESERVED PARKING	MUTCD: W7-8 18"x24" PER DETAIL 3, SHEET RS-C3.1 (E)
VAN ACCESSIBLE	MUTCD: R7-8B 18"x9" PER DETAIL 3, SHEET RS-C3.1 (F)
	MUTCD: W7-5 18"x18" 7' MOUNTING HEIGHT, POST TO BE PLACED 3' OFF EDGE OF LOOP SIMILAR TO DETAIL 4, SHEET RS-C3.1 (G)
TRAIL NARROWS AHEAD	MUTCD: W5 18"x18" 7' MOUNTING HEIGHT, POST TO BE PLACED 3' OFF EDGE OF LOOP SIMILAR TO DETAIL 4, SHEET RS-C3.1 (H)
STEEP GRADE	MUTCD: W7-3P 24"x18" 7' MOUNTING HEIGHT, POST TO BE PLACED 3' OFF EDGE OF LOOP SIMILAR TO DETAIL 4, SHEET RS-C3.1 (I)
	MUTCD: W1-5 30"x30" 7' MOUNTING HEIGHT SIMILAR TO DETAIL 1, SHEET RS-C3.1 (J)
	MUTCD: W1-10 30"x30" 7' MOUNTING HEIGHT SIMILAR TO DETAIL 1, SHEET RS-C3.1 (K)
	MUTCD: W1-5 30"x30" 7' MOUNTING HEIGHT SIMILAR TO DETAIL 1, SHEET RS-C3.1 (L)
	Share The Road 30"x30" 7' MOUNTING HEIGHT SIMILAR TO DETAIL 4, SHEET RS-C3.1 (M)

0 100' 200'

Key Plan

Seals

STATE OF KENTUCKY
ROBERT D. MARTIN
15958
LICENSED
PROFESSIONAL ENGINEER
Robert D. Martin 5/8/13

Engineering
Planning
1046 East Chestnut Street, Louisville, Kentucky 40204
Phone: (502) 582-9702 Fax: (502) 582-9704 www.mvd-eng.com
Kentucky • Indiana • Georgia • Tennessee • Florida

LANDSCAPE ARCHITECT
WRT
Wallace Roberts & Todd, LLC
1700 Market Street
28th Floor
Philadelphia, PA 19103
tel 215.732.5215
fax 215.732.2551

Architect
BRAVURA
111 West Washington Street
Louisville, Kentucky 40202
T: (502) 584-9900
F: (502) 584-0829

The Parklands of Floyds Fork, Project 4A

The Strand, Turkey Run Park and Broad Run
Louisville, Kentucky

Owner:
21st Century Parks, Inc.
371 W. Main St., Suite 202
Louisville, Kentucky 40202

REV #	DATE	DESCRIPTION
1	05-23-2013	Addendum #1: Added detail references

Job No:	12300.4AC
Date:	May 8, 2013
Scale:	1" = 100'
Drawn By:	

BID SET

Drawing Title:

Parklands of Floyds Fork

PROJECT 4A
Regulatory Signage and Striping Plan

Drawing No:

RS-C1.10

May 21, 2013 – 5:32pm
S:\12300.4AC – 21st Century Parks Phase 4A\SITE\Dwgs\Civil\12300.4AC-SIGNAGE AND STRIPING.dwg [RS-C1.10]

KEYNOTES (Striping)

1. DOUBLE YELLOW THERMOPLASTIC CENTERLINE STRIP WHERE INDICATED ON PLAN AND IN ACCORDANCE WITH THE MUTCD.
2. 18" THERMOPLASTIC STOP BAR AND "STOP" LETTERS. STRIPING TO BE SOLID WHITE REFLECTIVE PER MUTCD. STOP BARS SHOULD BE PLACED 4 FEET FROM THE NEAREST EDGE OF THE INTERSECTION TRAVELED WAY. SEE DETAIL 5, SHEET RW-C3.1.
3. 18" SOLID WHITE THERMOPLASTIC ALTERNATING CROSSWALK BARS WHERE INDICATED ON PLAN. BARS ARE TO BE 18" WIDE AND SPACED 4' ON CENTER.
4. PAINT WHITE PARKING STALL STRIPING WITH WHITE PAINT WHERE INDICATED ON PLAN, AND IN ACCORDANCE WITH SECTION 842 OF THE KENTUCKY DEPARTMENT OF TRANSPORTATION STANDARD SPECIFICATIONS FOR ROAD AND BRIDGE CONSTRUCTION.
5. PAINT BLUE STANDARD ACCESSIBLE PARKING STALL STRIPING ON ASPHALT PAVEMENT WHERE INDICATED ON PLAN AND PER DETAIL 6 AND DETAIL 8, SHEET RW-C3.1.
6. PAINT BLUE "VAN ACCESSIBLE" PARKING STALL STRIPING ON ASPHALT PAVEMENT WHERE INDICATED ON PLAN AND PER DETAIL 6 AND DETAIL 7, SHEET RW-C3.1.

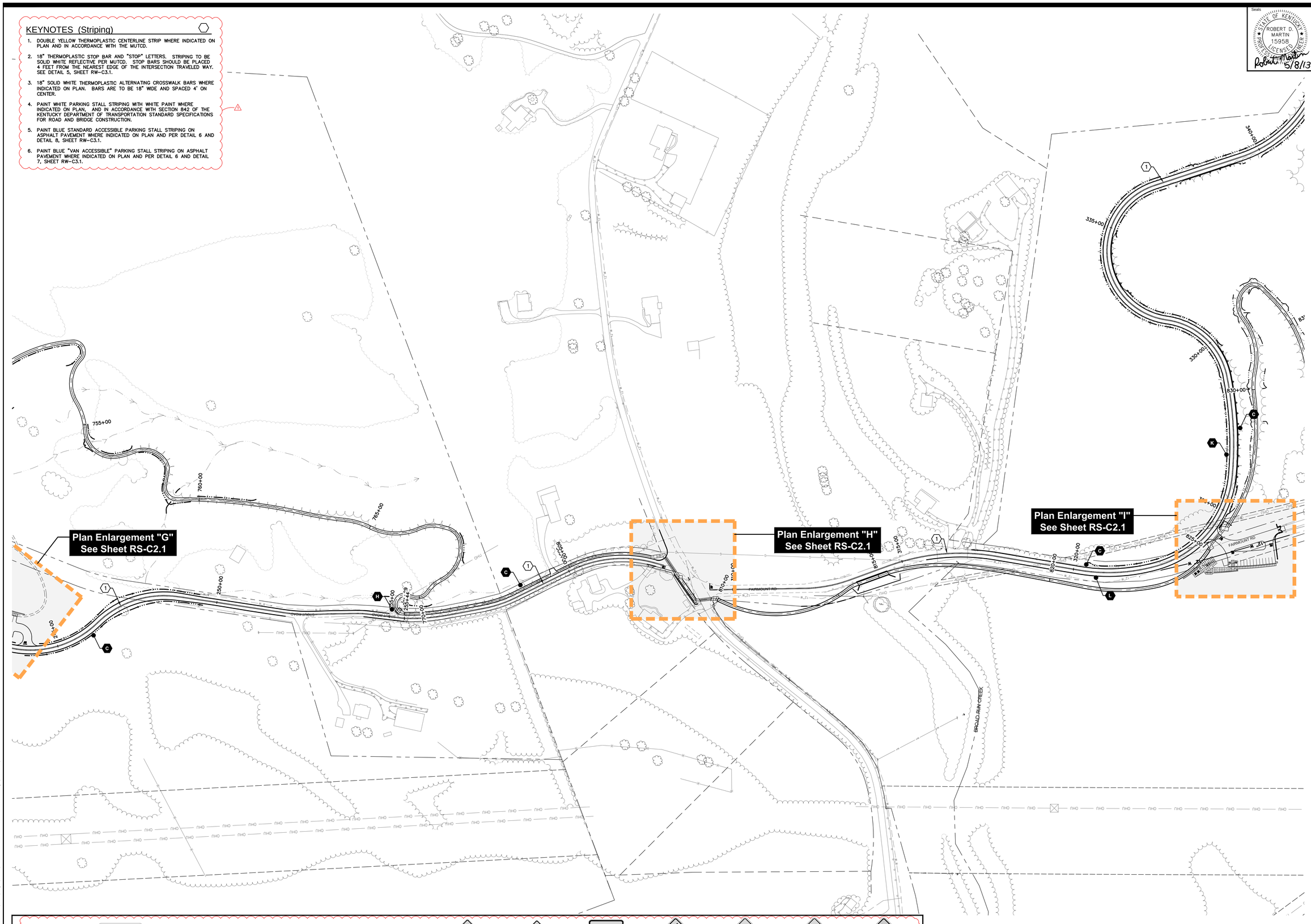

STOP	YIELD	SPEED LIMIT 25	HERE TO PEDESTRIANS	RESERVED PARKING	VAN ACCESSIBLE		TRAIL NARROWS AHEAD	STEEP GRADE				Share The Road
MUTCD: R1-1 24"x24" PER DETAIL 1 OR 2, SHEET RS-C3.1	MUTCD: R1-2 30"x30"x30" 5' MOUNTING HEIGHT SIMILAR TO DETAIL 1, SHEET RS-C3.1	MUTCD: R2-1 18"x24" PER DETAIL 4, SHEET RS-C3.1	MUTCD: R1-5A 18"x24" 7' MOUNTING HEIGHT SIMILAR TO DETAIL 4, SHEET RS-C3.1	MUTCD: W7-8 18"x24" PER DETAIL 3, SHEET RS-C3.1	MUTCD: R7-8B 18"x9" PER DETAIL 3, SHEET RS-C3.1	MUTCD: W7-5 18"x18 7' MOUNTING HEIGHT, POST TO BE PLACED 3' OFF EDGE OF LOOP SIMILAR TO DETAIL 4, SHEET RS-C3.1	MUTCD: W5 18"x18" 7' MOUNTING HEIGHT, POST TO BE PLACED 3' OFF EDGE OF LOOP SIMILAR TO DETAIL 4, SHEET RS-C3.1	MUTCD: W7-3P 24"x18" 7' MOUNTING HEIGHT, POST TO BE PLACED 3' OFF EDGE OF LOOP SIMILAR TO DETAIL 4, SHEET RS-C3.1	MUTCD: W1-5 30"x30" 7' MOUNTING HEIGHT SIMILAR TO DETAIL 1, SHEET RS-C3.1	MUTCD: W1-10 30"x30" 7' MOUNTING HEIGHT SIMILAR TO DETAIL 1, SHEET RS-C3.1	MUTCD: W1-5 30"x30" 7' MOUNTING HEIGHT SIMILAR TO DETAIL 1, SHEET RS-C3.1	Share The Road 30"x30" 7' MOUNTING HEIGHT SIMILAR TO DETAIL 4, SHEET RS-C3.1
A	B	C	D	E	F	G	H	I	J	K	L	M

0 100' 200'

Key Plan

Seals

STATE OF KENTUCKY
ROBERT D. MARTIN
15958
LICENSED
PROFESSIONAL ENGINEER
Robert D. Martin 5/8/13

Engineering
Planning
1046 East Chestnut Street, Louisville, Kentucky 40204
Phone: 502.584.9900 Fax: 502.584.0829
Kentucky • Indiana • Georgia • Tennessee • Florida

LANDSCAPE ARCHITECT
WRT
Wallace Roberts & Todd, LLC
1700 Market Street
28th Floor
Philadelphia, PA 19103
tel 215.732.5215
fax 215.732.2551

Architect
BRAVURA
111 West Washington Street
Louisville, Kentucky 40202
T: (502) 584-9900
F: (502) 584-0829

The Parklands of Floyds Fork, Project 4A

The Strand, Turkey Run Park and Broad Run
Louisville, Kentucky

Owner:
21st Century Parks, Inc.
371 W. Main St., Suite 202
Louisville, Kentucky 40202

REV #	DATE	DESCRIPTION
1	05-23-2013	Addendum #1. Added detail references

Job No:	12300.4AC
Date:	May 8, 2013
Scale:	1" = 100'
Drawn By:	

BID SET

Drawing Title:

Parklands of Floyds Fork

PROJECT 4A
Regulatory Signage and Striping Plan

Drawing No:

RS-C1.9

May 21, 2013 – 5:31pm
J:\12300.4AC – 21st Century Parks Phase 4A\SITE\Dwgs\CDs\12300.4AC- SIGNAGE AND STRIPING.dwg (RS-C1.9)

KEYNOTES (Striping)

1. DOUBLE YELLOW THERMOPLASTIC CENTERLINE STRIP WHERE INDICATED ON PLAN AND IN ACCORDANCE WITH THE MUTCD.
2. 18" THERMOPLASTIC STOP BAR AND "STOP" LETTERS. STRIPING TO BE SOLID WHITE REFLECTIVE PER MUTCD. STOP BARS SHOULD BE PLACED 4 FEET FROM THE NEAREST EDGE OF THE INTERSECTION TRAVELED WAY. SEE DETAIL 5, SHEET RW-C3.1.
3. 18" SOLID WHITE THERMOPLASTIC ALTERNATING CROSSWALK BARS WHERE INDICATED ON PLAN. BARS ARE TO BE 18" WIDE AND SPACED 4' ON CENTER.
4. PAINT WHITE PARKING STALL STRIPING WITH WHITE PAINT WHERE INDICATED ON PLAN, AND IN ACCORDANCE WITH SECTION 842 OF THE KENTUCKY DEPARTMENT OF TRANSPORTATION STANDARD SPECIFICATIONS FOR ROAD AND BRIDGE CONSTRUCTION.
5. PAINT BLUE STANDARD ACCESSIBLE PARKING STALL STRIPING ON ASPHALT PAVEMENT WHERE INDICATED ON PLAN AND PER DETAIL 6 AND DETAIL 8, SHEET RW-C3.1.
6. PAINT BLUE "VAN ACCESSIBLE" PARKING STALL STRIPING ON ASPHALT PAVEMENT WHERE INDICATED ON PLAN AND PER DETAIL 6 AND DETAIL 7, SHEET RW-C3.1.

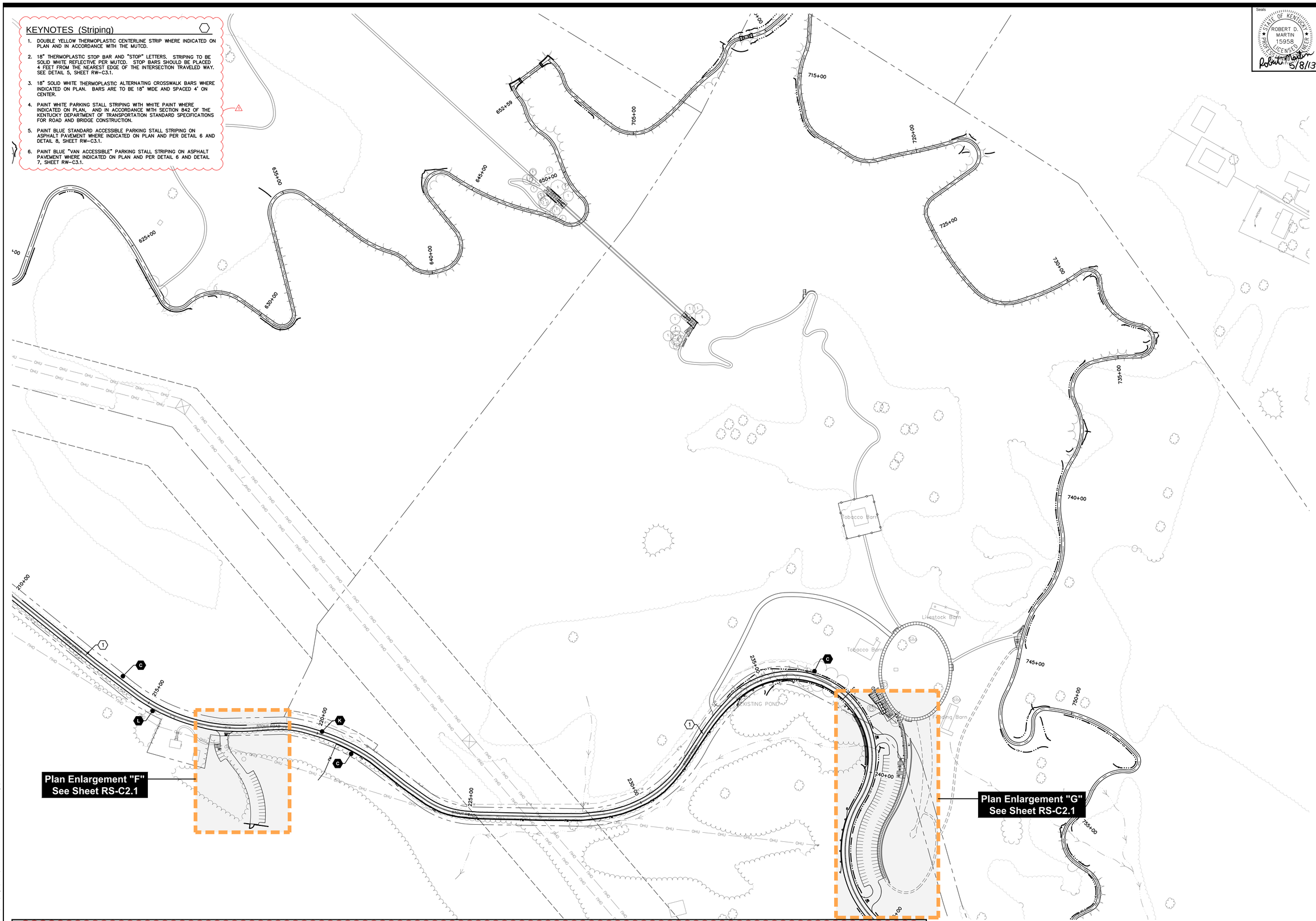

STOP	YIELD	SPEED LIMIT 25	HERE TO PEDESTRIANS	RESERVED PARKING	VAN ACCESSIBLE		TRAIL NARROWS AHEAD	STEEP GRADE				
MUTCD: R1-1 24"x24" PER DETAIL 1 OR 2, SHEET RS-C3.1	MUTCD: R1-2 30"x30"x30" 5' MOUNTING HEIGHT SIMILAR TO DETAIL 1, SHEET RS-C3.1	MUTCD: R2-1 18"x24" PER DETAIL 4, SHEET RS-C3.1	MUTCD: R1-5A 18"x24" 7' MOUNTING HEIGHT SIMILAR TO DETAIL 4, SHEET RS-C3.1	MUTCD: W7-8 18"x24" PER DETAIL 3, SHEET RS-C3.1	MUTCD: R7-8B 18"x9" PER DETAIL 3, SHEET RS-C3.1	MUTCD: W7-5 18"x18 7' MOUNTING HEIGHT, POST TO BE PLACED 3' OFF EDGE OF LOOP SIMILAR TO DETAIL 4, SHEET RS-C3.1	MUTCD: W5 18"x18" 7' MOUNTING HEIGHT, POST TO BE PLACED 3' OFF EDGE OF LOOP SIMILAR TO DETAIL 4, SHEET RS-C3.1	MUTCD: W7-3P 24"x18" 7' MOUNTING HEIGHT, POST TO BE PLACED 3' OFF EDGE OF LOOP SIMILAR TO DETAIL 4, SHEET RS-C3.1	MUTCD: W1-5 30"x30" 7' MOUNTING HEIGHT SIMILAR TO DETAIL 1, SHEET RS-C3.1	MUTCD: W1-10 30"x30" 7' MOUNTING HEIGHT SIMILAR TO DETAIL 1, SHEET RS-C3.1	MUTCD: W1-5 30"x30" 7' MOUNTING HEIGHT SIMILAR TO DETAIL 1, SHEET RS-C3.1	Share The Road 30"x30" 7' MOUNTING HEIGHT SIMILAR TO DETAIL 4, SHEET RS-C3.1
A	B	C	D	E	F	G	H	I	J	K	L	M

0 100' 200'

Key Plan

Seals

STATE OF KENTUCKY
ROBERT D. MARTIN
15958
LICENSED
PROFESSIONAL ENGINEER
Robert D. Martin 5/8/13

Engineering
Planning
1046 East Chestnut Street, Louisville, Kentucky 40204
Phone: (502) 584-9900 www.bravura-llc.com
Kentucky • Indiana • Georgia • Tennessee • Florida

LANDSCAPE ARCHITECT
WRT
Wallace Roberts & Todd, LLC
1700 Market Street
28th Floor
Philadelphia, PA 19103
tel 215.732.5215
fax 215.732.2551

Architect
BRAVURA
111 West Washington Street
Louisville, Kentucky 40202
T: (502) 584-9900
F: (502) 584-0829

The Parklands of Floyds Fork, Project 4A

The Strand, Turkey Run Park and Broad Run
Louisville, Kentucky

Owner:
21st Century Parks, Inc.
371 W. Main St., Suite 202
Louisville, Kentucky 40202

REV #	DATE	DESCRIPTION
1	05-23-2013	Addendum #1: Added detail references

Job No:	12300.4AC
Date:	May 8, 2013
Scale:	1" = 100'
Drawn By:	

BID SET

Drawing Title:

Parklands of Floyds Fork

PROJECT 4A
Regulatory Signage and Striping Plan

Drawing No:

RS-C1.8

May 21, 2013 – 5:31pm
J:\12300.4AC – 21st Century Parks Phase 4A\SITE\Dwgs\Docs\12300.4AC-SIGNAGE AND STRIPING.dwg (RS-C1.8)

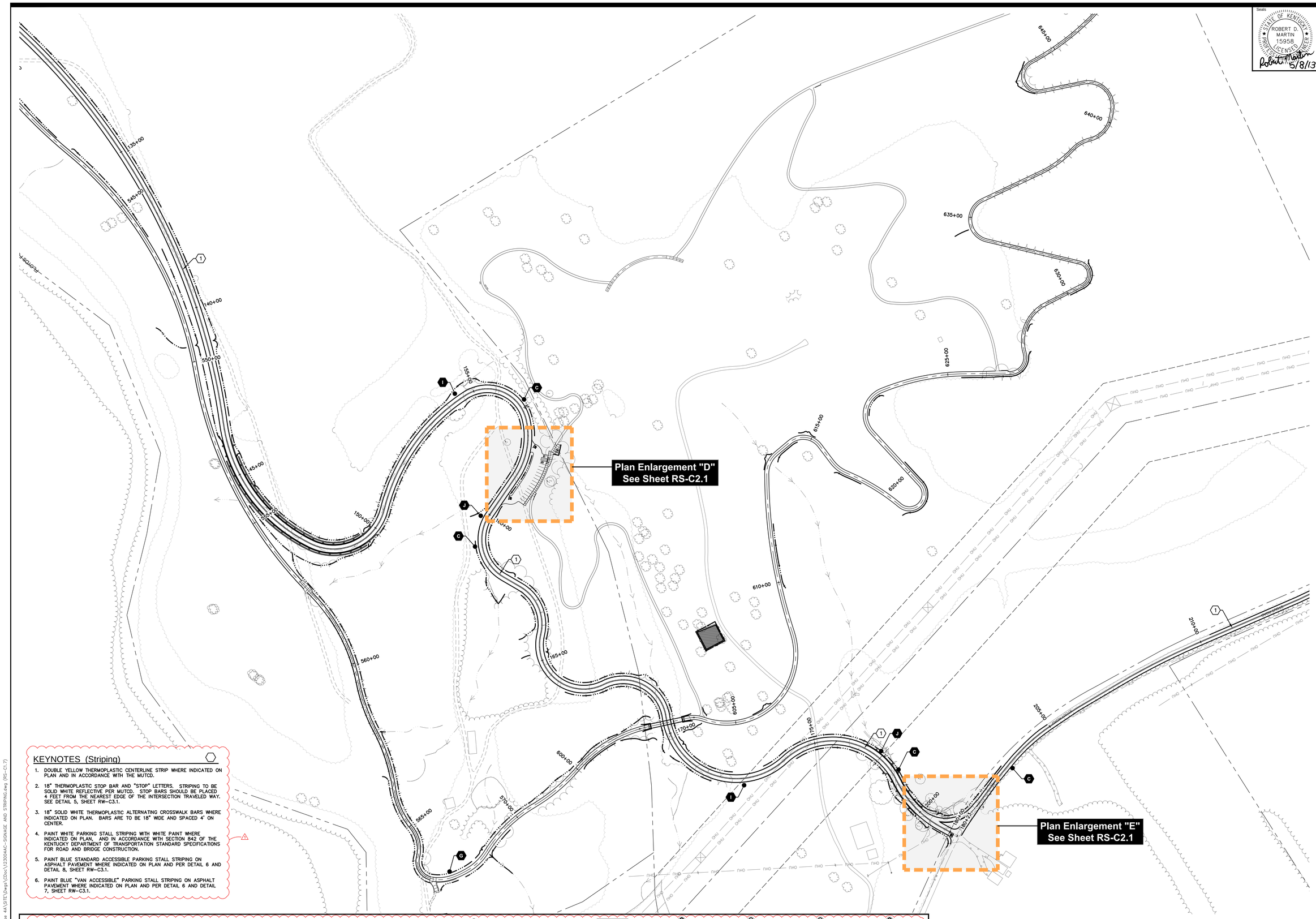

KEYNOTES (Striping)

1. DOUBLE YELLOW THERMOPLASTIC CENTERLINE STRIP WHERE INDICATED ON PLAN AND IN ACCORDANCE WITH THE MUTCD.
2. 18" THERMOPLASTIC STOP BAR AND "STOP" LETTERS. STRIPING TO BE SOLID WHITE REFLECTIVE PER MUTCD. STOP BARS SHOULD BE PLACED 4 FEET FROM THE NEAREST EDGE OF THE INTERSECTION TRAVELED WAY. SEE DETAIL 5, SHEET RW-C3.1.
3. 18" SOLID WHITE THERMOPLASTIC ALTERNATING CROSSWALK BARS WHERE INDICATED ON PLAN. BARS ARE TO BE 18" WIDE AND SPACED 4' ON CENTER.
4. PAINT WHITE PARKING STALL STRIPING WITH WHITE PAINT WHERE INDICATED ON PLAN, AND IN ACCORDANCE WITH SECTION 842 OF THE KENTUCKY DEPARTMENT OF TRANSPORTATION STANDARD SPECIFICATIONS FOR ROAD AND BRIDGE CONSTRUCTION.
5. PAINT BLUE STANDARD ACCESSIBLE PARKING STALL STRIPING ON ASPHALT PAVEMENT WHERE INDICATED ON PLAN AND PER DETAIL 6 AND DETAIL 8, SHEET RW-C3.1.
6. PAINT BLUE "VAN ACCESSIBLE" PARKING STALL STRIPING ON ASPHALT PAVEMENT WHERE INDICATED ON PLAN AND PER DETAIL 6 AND DETAIL 7, SHEET RW-C3.1.

STOP	YIELD	SPEED LIMIT 25	HERE TO PEDESTRIANS	RESERVED PARKING	VAN ACCESSIBLE		TRAIL MARKERS AHEAD	STEEP GRADE				
MUTCD: R1-1 24"x24" PER DETAIL 1 OR 2, SHEET RS-C3.1 A	MUTCD: R1-2 30"x30"x30" 5' MOUNTING HEIGHT SIMILAR TO DETAIL 1, SHEET RS-C3.1 B	MUTCD: R2-1 18"x24" PER DETAIL 4, SHEET RS-C3.1 C	MUTCD: R1-5A 18"x24" 7' MOUNTING HEIGHT SIMILAR TO DETAIL 4, SHEET RS-C3.1 D	MUTCD: W7-8 18"x24" PER DETAIL 3, SHEET RS-C3.1 E	MUTCD: R7-8B 18"x9" PER DETAIL 3, SHEET RS-C3.1 F	MUTCD: W7-5 18"x18" 7' MOUNTING HEIGHT, POST TO BE PLACED 3' OFF EDGE OF LOOP SIMILAR TO DETAIL 4, SHEET RS-C3.1 G	MUTCD: W5 18"x18" 7' MOUNTING HEIGHT, POST TO BE PLACED 3' OFF EDGE OF LOOP SIMILAR TO DETAIL 4, SHEET RS-C3.1 H	MUTCD: W7-3P 24"x18" 7' MOUNTING HEIGHT, POST TO BE PLACED 3' OFF EDGE OF LOOP SIMILAR TO DETAIL 4, SHEET RS-C3.1 I	MUTCD: W1-5 30"x30" 7' MOUNTING HEIGHT SIMILAR TO DETAIL 1, SHEET RS-C3.1 J	MUTCD: W1-10 30"x30" 7' MOUNTING HEIGHT SIMILAR TO DETAIL 1, SHEET RS-C3.1 K	MUTCD: W1-5 30"x30" 7' MOUNTING HEIGHT SIMILAR TO DETAIL 1, SHEET RS-C3.1 L	Share The Road 30"x30" 7' MOUNTING HEIGHT SIMILAR TO DETAIL 4, SHEET RS-C3.1 M

0 100' 200'

Key Plan

Seals

STATE OF KENTUCKY
ROBERT D. MARTIN
15958
LICENSED
PROFESSIONAL ENGINEER
Robert D. Martin 5/8/13

Engineering
Planning
1046 East Chestnut Street, Louisville, Kentucky 40204
Phone: 502.584.9900 Fax: 502.584.0829
Kentucky • Indiana • Georgia • Tennessee • Florida

LANDSCAPE ARCHITECT
WRT
Wallace Roberts & Todd, LLC
1700 Market Street
28th Floor
Philadelphia, PA 19103
tel 215.732.5215
fax 215.732.2551

Architect
BRAVURA
111 West Washington Street
Louisville, Kentucky 40202
T: (502) 584-9900
F: (502) 584-0829

The Parklands of Floyds Fork, Project 4A

The Strand, Turkey Run Park and Broad Run
Louisville, Kentucky

Owner:
21st Century Parks, Inc.
371 W. Main St., Suite 202
Louisville, Kentucky 40202

REV #	DATE	DESCRIPTION
1	05-23-2013	Addendum #1: Added detail references

Job No:	12300.4AC
Date:	May 8, 2013
Scale:	1" = 100'
Drawn By:	

BID SET

Drawing Title:

Parklands of Floyds Fork

PROJECT 4A
Regulatory Signage and Striping Plan

Drawing No:

RS-C1.7

May 21, 2013 - 5:30pm
J:\12300.4AC - 21st Century Parks Phase 4A\SITE\Dwgs\Cdocs\12300.4AC-SIGNAGE AND STRIPING.dwg (RS-C1.7)

KEYNOTES (Striping)

1. DOUBLE YELLOW THERMOPLASTIC CENTERLINE STRIP WHERE INDICATED ON PLAN AND IN ACCORDANCE WITH THE MUTCD.
2. 18" THERMOPLASTIC STOP BAR AND "STOP" LETTERS. STRIPING TO BE SOLID WHITE REFLECTIVE PER MUTCD. STOP BARS SHOULD BE PLACED 4 FEET FROM THE NEAREST EDGE OF THE INTERSECTION TRAVELED WAY. SEE DETAIL 5, SHEET RW-C3.1.
3. 18" SOLID WHITE THERMOPLASTIC ALTERNATING CROSSWALK BARS WHERE INDICATED ON PLAN. BARS ARE TO BE 18" WIDE AND SPACED 4' ON CENTER.
4. PAINT WHITE PARKING STALL STRIPING WITH WHITE PAINT WHERE INDICATED ON PLAN, AND IN ACCORDANCE WITH SECTION 842 OF THE KENTUCKY DEPARTMENT OF TRANSPORTATION STANDARD SPECIFICATIONS FOR ROAD AND BRIDGE CONSTRUCTION.
5. PAINT BLUE STANDARD ACCESSIBLE PARKING STALL STRIPING ON ASPHALT PAVEMENT WHERE INDICATED ON PLAN AND PER DETAIL 6 AND DETAIL 8, SHEET RW-C3.1.
6. PAINT BLUE "VAN ACCESSIBLE" PARKING STALL STRIPING ON ASPHALT PAVEMENT WHERE INDICATED ON PLAN AND PER DETAIL 6 AND DETAIL 7, SHEET RW-C3.1.

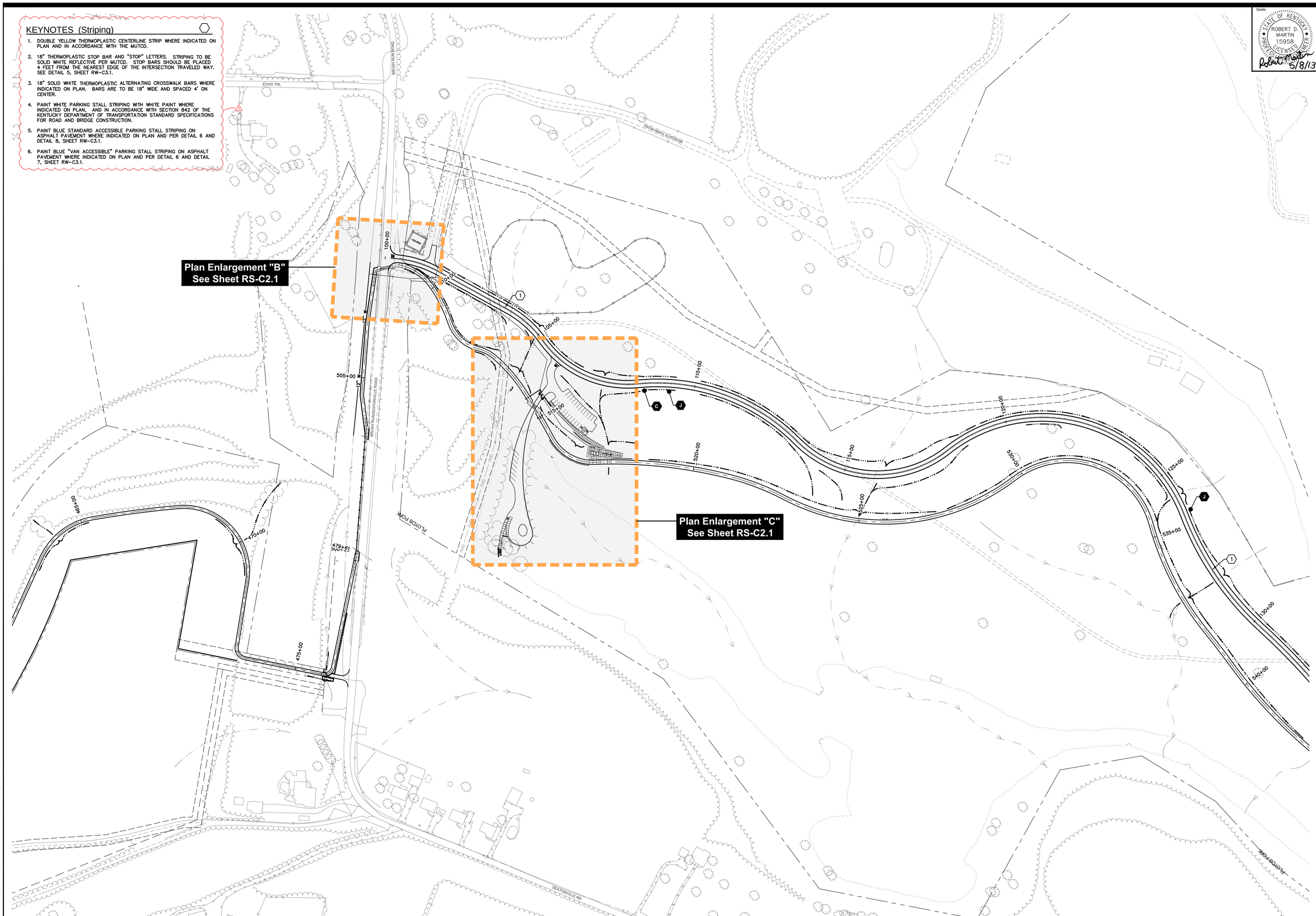

STOP MUTCD: R1-1 24"x24" PER DETAIL 1 OR 2, SHEET RS-C3.1 A	YIELD MUTCD: R1-2 30"x30"x30" 5' MOUNTING HEIGHT SIMILAR TO DETAIL 1, SHEET RS-C3.1 B
SPEED LIMIT 25 MUTCD: R2-1 18"x24" PER DETAIL 4, SHEET RS-C3.1 C	HERE TO PEDESTRIANS MUTCD: R1-5A 18"x24" 7' MOUNTING HEIGHT SIMILAR TO DETAIL 4, SHEET RS-C3.1 D
RESERVED PARKING MUTCD: W7-8 18"x24" PER DETAIL 3, SHEET RS-C3.1 E	VAN ACCESSIBLE MUTCD: R7-8B 18"x9" PER DETAIL 3, SHEET RS-C3.1 F
MUTCD: W7-5 18"x18 7' MOUNTING HEIGHT SIMILAR TO DETAIL 4, SHEET RS-C3.1 G	TRAIL NARROWS AHEAD MUTCD: W5 18"x18" 7' MOUNTING HEIGHT SIMILAR TO DETAIL 4, SHEET RS-C3.1 H
STEEP GRADE MUTCD: W7-3P 24"x18" 7' MOUNTING HEIGHT SIMILAR TO DETAIL 4, SHEET RS-C3.1 I	MUTCD: W1-5 30"x30" 5' MOUNTING HEIGHT SIMILAR TO DETAIL 1, SHEET RS-C3.1 J
MUTCD: W1-10 30"x30" 5' MOUNTING HEIGHT SIMILAR TO DETAIL 1, SHEET RS-C3.1 K	MUTCD: W1-5 30"x30" 5' MOUNTING HEIGHT SIMILAR TO DETAIL 1, SHEET RS-C3.1 L
Share The Road 30"x30" 7' MOUNTING HEIGHT SIMILAR TO DETAIL 4, SHEET RS-C3.1 M	

0 100' 200'

Key Plan

Seals

STATE OF KENTUCKY ROBERT D. MARTIN 15958 LICENSED PROFESSIONAL ENGINEER
Robert D. Martin 5/8/13

Engineering
Planning
1046 East Chestnut Street, Louisville, Kentucky 40204
Phone: (502) 584-6292 Fax: (502) 584-6297
Kentucky • Indiana • Georgia • Tennessee • Florida

LANDSCAPE ARCHITECT
WRT
Wallace Roberts & Todd, LLC
1700 Market Street
28th Floor
Philadelphia, PA 19103
tel 215.732.5215
fax 215.732.2551

Architect
BRAVURA
111 West Washington Street
Louisville, Kentucky 40202
T: (502) 584-9900
F: (502) 584-0829

The Parklands of Floyds Fork, Project 4A

The Strand, Turkey Run Park and Broad Run
Louisville, Kentucky

Owner:
21st Century Parks, Inc.
371 W. Main St., Suite 202
Louisville, Kentucky 40202

REV #	DATE	DESCRIPTION
1	05-23-2013	Addendum #1: Added detail references

Job No:	12300.4AC
Date:	May 8, 2013
Scale:	1" = 100'
Drawn By:	

BID SET

Drawing Title:

Parklands of Floyds Fork

PROJECT 4A
Regulatory Signage and Striping Plan

Drawing No:

RS-C1.6

May 21, 2013 – 4:55pm
U:\12300.4AC – 21st Century Parks Phase 4A\SITE\Dwgs\Civil\12300.4AC-SIGNAGE AND STRIPING.dwg (RS-C1.6)

RS-C1.1 Added detail references

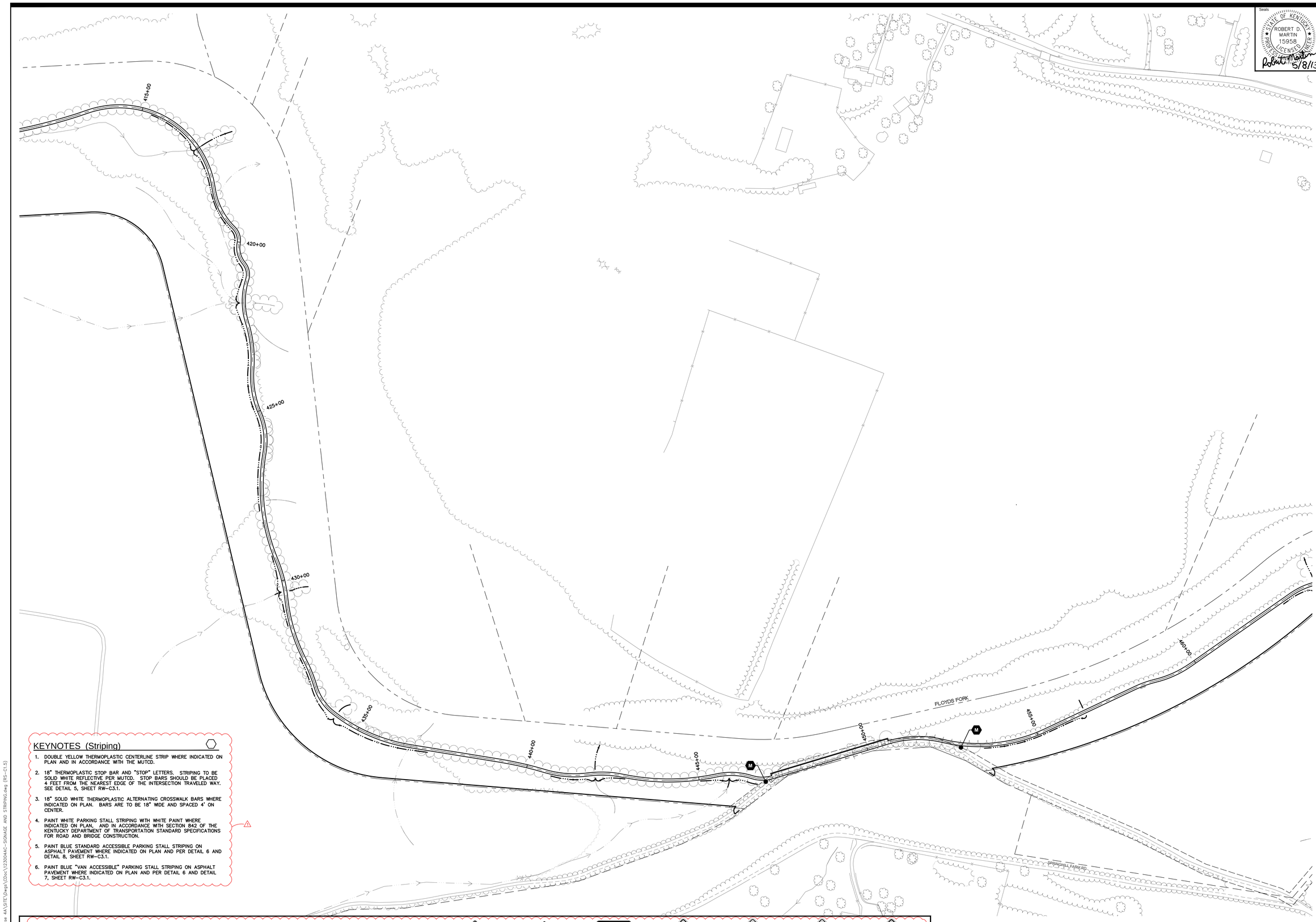

KEYNOTES (Striping)

1. DOUBLE YELLOW THERMOPLASTIC CENTERLINE STRIP WHERE INDICATED ON PLAN AND IN ACCORDANCE WITH THE MUTCD.
2. 18" THERMOPLASTIC STOP BAR AND "STOP" LETTERS. STRIPING TO BE SOLID WHITE REFLECTIVE PER MUTCD. STOP BARS SHOULD BE PLACED 4 FEET FROM THE NEAREST EDGE OF THE INTERSECTION TRAVELED WAY. SEE DETAIL 5, SHEET RW-C3.1.
3. 18" SOLID WHITE THERMOPLASTIC ALTERNATING CROSSWALK BARS WHERE INDICATED ON PLAN. BARS ARE TO BE 18" WIDE AND SPACED 4' ON CENTER.
4. PAINT WHITE PARKING STALL STRIPING WITH WHITE PAINT WHERE INDICATED ON PLAN, AND IN ACCORDANCE WITH SECTION 842 OF THE KENTUCKY DEPARTMENT OF TRANSPORTATION STANDARD SPECIFICATIONS FOR ROAD AND BRIDGE CONSTRUCTION.
5. PAINT BLUE STANDARD ACCESSIBLE PARKING STALL STRIPING ON ASPHALT PAVEMENT WHERE INDICATED ON PLAN AND PER DETAIL 6 AND DETAIL 8, SHEET RW-C3.1.
6. PAINT BLUE "VAN ACCESSIBLE" PARKING STALL STRIPING ON ASPHALT PAVEMENT WHERE INDICATED ON PLAN AND PER DETAIL 6 AND DETAIL 7, SHEET RW-C3.1.

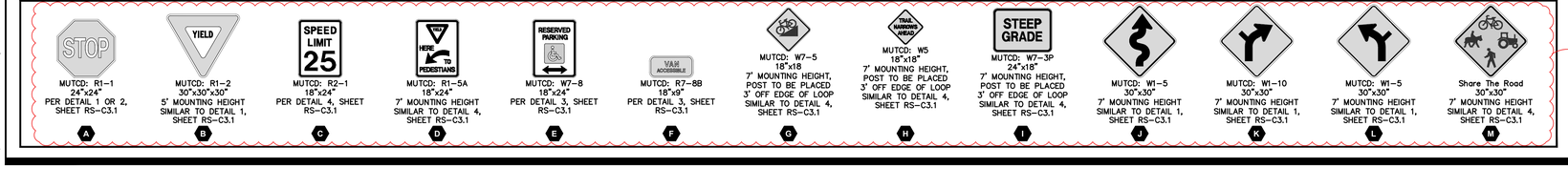

MUTCD: R1-1 24"x24" PER DETAIL 1 OR 2, SHEET RS-C3.1	MUTCD: R1-2 30"x30"x30" 5' MOUNTING HEIGHT SIMILAR TO DETAIL 1, SHEET RS-C3.1	MUTCD: R2-1 18"x24" PER DETAIL 4, SHEET RS-C3.1	MUTCD: R1-5A 18"x24" 7' MOUNTING HEIGHT SIMILAR TO DETAIL 4, SHEET RS-C3.1	MUTCD: W7-8 18"x24" PER DETAIL 3, SHEET RS-C3.1	MUTCD: R7-8B 18"x9" PER DETAIL 3, SHEET RS-C3.1	MUTCD: W7-5 18"x18 7' MOUNTING HEIGHT, POST TO BE PLACED 3' OFF EDGE OF LOOP SIMILAR TO DETAIL 4, SHEET RS-C3.1	MUTCD: W5 18"x18" 7' MOUNTING HEIGHT, POST TO BE PLACED 3' OFF EDGE OF LOOP SIMILAR TO DETAIL 4, SHEET RS-C3.1	MUTCD: W7-3P 24"x18" 7' MOUNTING HEIGHT, POST TO BE PLACED 3' OFF EDGE OF LOOP SIMILAR TO DETAIL 4, SHEET RS-C3.1	MUTCD: W1-5 30"x30" 7' MOUNTING HEIGHT SIMILAR TO DETAIL 1, SHEET RS-C3.1	MUTCD: W1-10 30"x30" 7' MOUNTING HEIGHT SIMILAR TO DETAIL 1, SHEET RS-C3.1	MUTCD: W1-5 30"x30" 7' MOUNTING HEIGHT SIMILAR TO DETAIL 1, SHEET RS-C3.1	Share The Road 30"x30" 7' MOUNTING HEIGHT SIMILAR TO DETAIL 4, SHEET RS-C3.1
A	B	C	D	E	F	G	H	I	J	K	L	M

0 100' 200'

Key Plan

Seals

STATE OF KENTUCKY ROBERT D. MARTIN 15958 LICENSED PROFESSIONAL ENGINEER

Robert D. Martin 5/8/13

Engineering
Planning

1046 East Chestnut Street, Louisville, Kentucky 40204
T: (502) 584-9922 F: (502) 584-0829 www.paeinc.com
Kentucky • Indiana • Georgia • Tennessee • Florida

LANDSCAPE ARCHITECT
WRT
Wallace Roberts & Todd, LLC
1700 Market Street
28th Floor
Philadelphia, PA 19103
tel 215.732.5215
fax 215.732.2551

Architect
BRAVURA
111 West Washington Street
Louisville, Kentucky 40202
T: (502) 584-9900
F: (502) 584-0829

The Parklands of Floyds Fork, Project 4A

The Strand, Turkey Run Park and Broad Run

Louisville, Kentucky

Owner:
21st Century Parks, Inc.
371 W. Main St., Suite 202
Louisville, Kentucky 40202

REV #	DATE	DESCRIPTION
1	05-23-2013	Addendum #1. Added detail references

Job No:	12300.4AC
Date:	May 8, 2013
Scale:	1" = 100'
Drawn By:	

BID SET

Drawing Title:

Parklands of Floyds Fork

PROJECT 4A
Regulatory Signage and Striping Plan

Drawing No:

RS-C1.5

May 21, 2013 – 5:30pm
G:\12300.4AC – 21st Century Parks Phase 4A\SITE\Dwgs\Docs\12300.4AC-SIGNAGE AND STRIPING.dwg (RS-C1.5)

KEYNOTES (Striping)

1. DOUBLE YELLOW THERMOPLASTIC CENTERLINE STRIP WHERE INDICATED ON PLAN AND IN ACCORDANCE WITH THE MUTCD.
2. 18" THERMOPLASTIC STOP BAR AND "STOP" LETTERS. STRIPING TO BE SOLID WHITE REFLECTIVE PER MUTCD. STOP BARS SHOULD BE PLACED 4 FEET FROM THE NEAREST EDGE OF THE INTERSECTION TRAVELED WAY. SEE DETAIL 5, SHEET RW-C3.1.
3. 18" SOLID WHITE THERMOPLASTIC ALTERNATING CROSSWALK BARS WHERE INDICATED ON PLAN. BARS ARE TO BE 18" WIDE AND SPACED 4' ON CENTER.
4. PAINT WHITE PARKING STALL STRIPING WITH WHITE PAINT WHERE INDICATED ON PLAN, AND IN ACCORDANCE WITH SECTION 842 OF THE KENTUCKY DEPARTMENT OF TRANSPORTATION STANDARD SPECIFICATIONS FOR ROAD AND BRIDGE CONSTRUCTION.
5. PAINT BLUE STANDARD ACCESSIBLE PARKING STALL STRIPING ON ASPHALT PAVEMENT WHERE INDICATED ON PLAN AND PER DETAIL 6 AND DETAIL 8, SHEET RW-C3.1.
6. PAINT BLUE "VAN ACCESSIBLE" PARKING STALL STRIPING ON ASPHALT PAVEMENT WHERE INDICATED ON PLAN AND PER DETAIL 6 AND DETAIL 7, SHEET RW-C3.1.

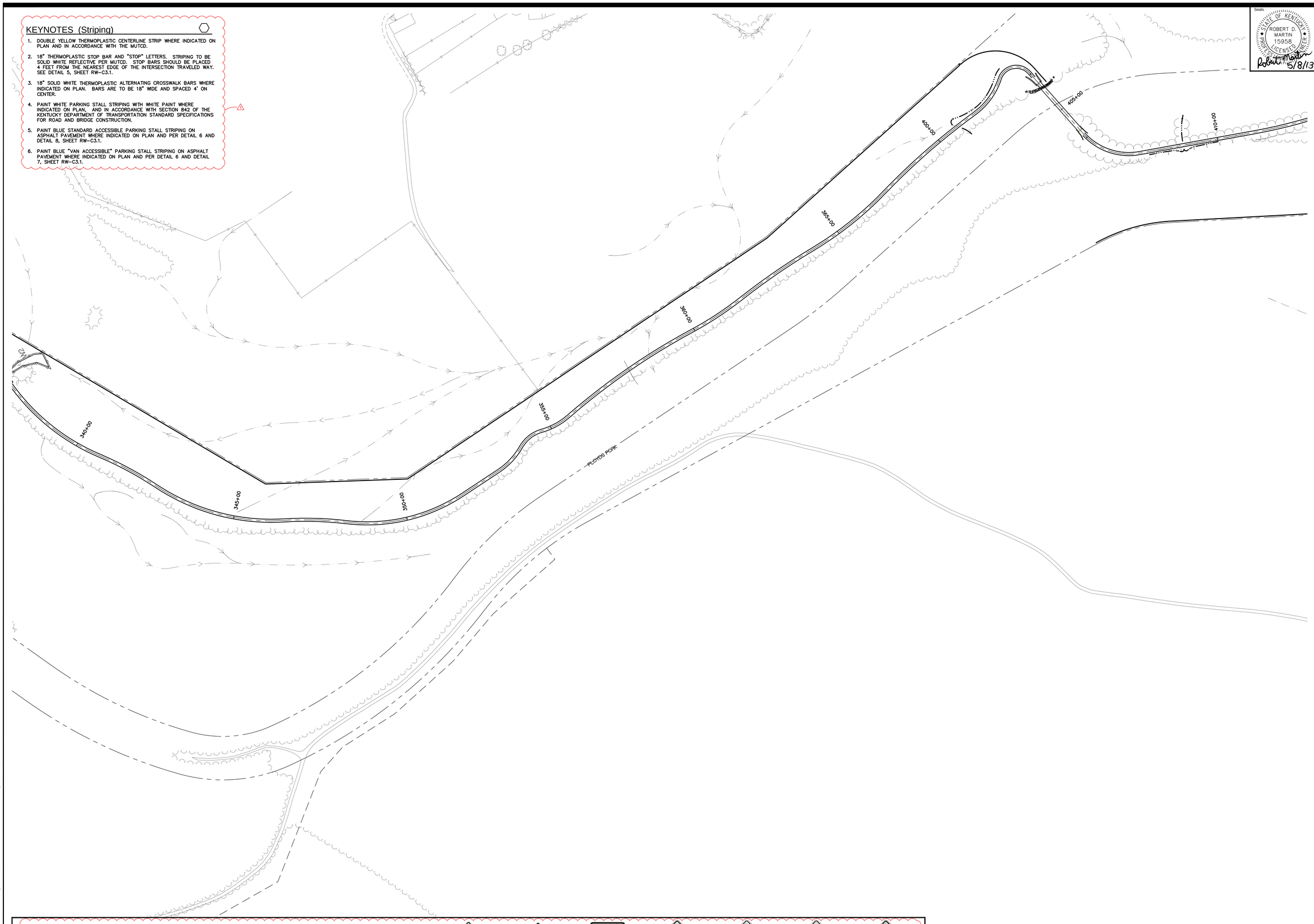

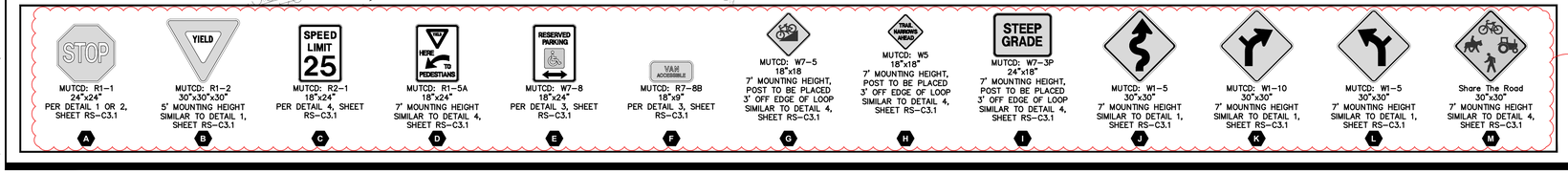

0 100' 200'

Key Plan

Seals

STATE OF KENTUCKY
ROBERT D. MARTIN
15958
LICENSED
PROFESSIONAL ENGINEER
Robert D. Martin 5/8/13

Engineering
Planning

1046 East Chestnut Street, Louisville, Kentucky 40204
Phone: 502.584.9900 Fax: 502.584.0829 www.mvd-eng.com
Kentucky • Indiana • Georgia • Tennessee • Florida

LANDSCAPE ARCHITECT
WRT
Wallace Roberts & Todd, LLC
1700 Market Street
28th Floor
Philadelphia, PA 19103
tel 215.732.5215
fax 215.732.2551

Architect
BRAVURA
111 West Washington Street
Louisville, Kentucky 40202
T: (502) 584-9900
F: (502) 584-0829

The Parklands of Floyds Fork, Project 4A

The Strand, Turkey Run Park and Broad Run
Louisville, Kentucky

Owner:
21st Century Parks, Inc.
371 W. Main St., Suite 202
Louisville, Kentucky 40202

REV #	DATE	DESCRIPTION
1	05-23-2013	Addendum #1: Added detail references

Job No:	12300.4AC
Date:	May 8, 2013
Scale:	1" = 100'
Drawn By:	

BID SET

Drawing Title:

Parklands of Floyds Fork

PROJECT 4A
Regulatory Signage and Striping Plan

Drawing No:

RS-C1.4

May 21, 2013 – 5:29pm
U:\12300.4AC – 21st Century Parks Phase 4A\SITE\Dwgs\Civil\12300.4AC-SIGNAGE AND STRIPING.dwg (RS-C1.4)

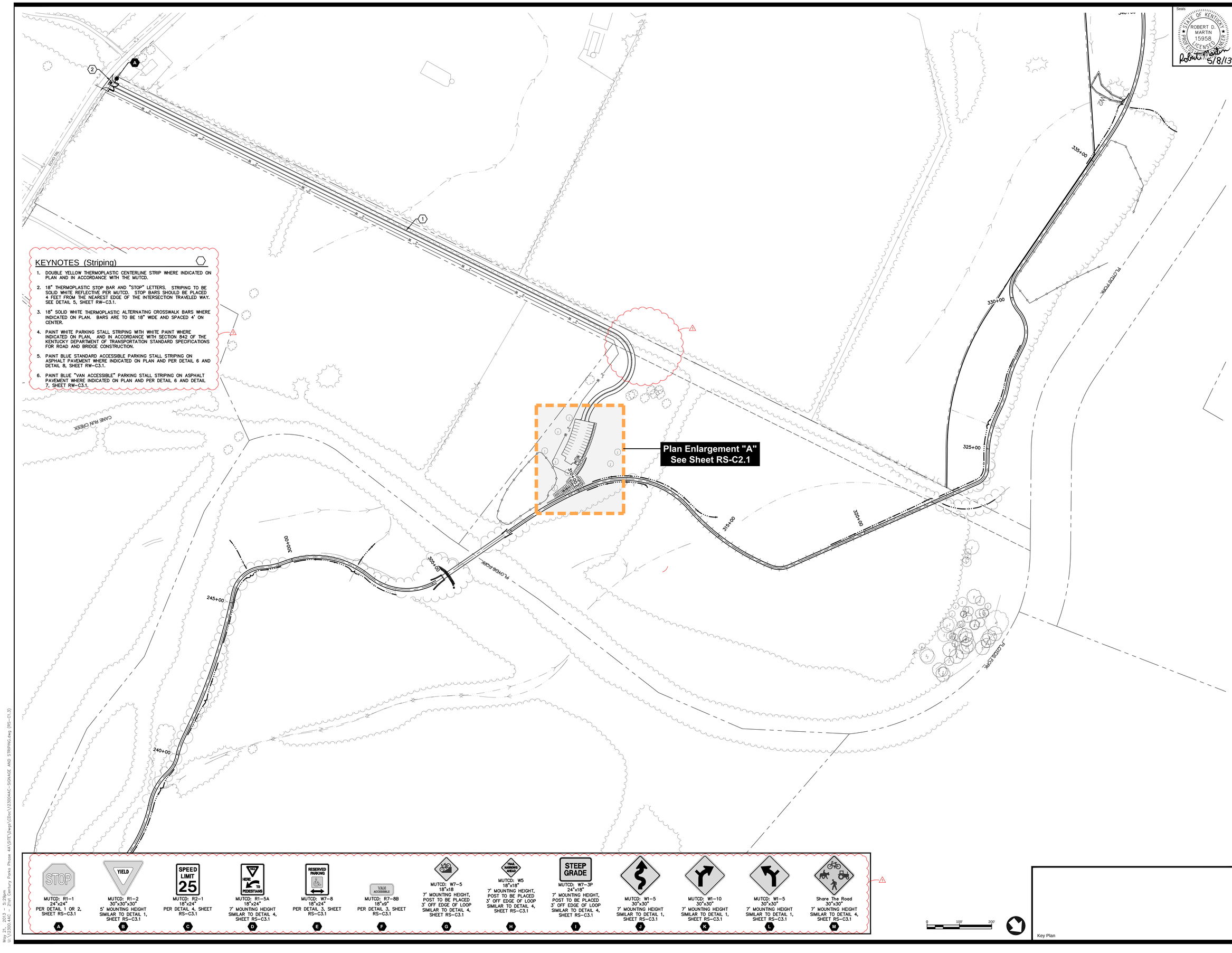

KEYNOTES (Striping)

1. DOUBLE YELLOW THERMOPLASTIC CENTERLINE STRIP WHERE INDICATED ON PLAN AND IN ACCORDANCE WITH THE MUTCD.
2. 18" THERMOPLASTIC STOP BAR AND "STOP" LETTERS. STRIPING TO BE SOLID WHITE REFLECTIVE PER MUTCD. STOP BARS SHOULD BE PLACED 4 FEET FROM THE NEAREST EDGE OF THE INTERSECTION TRAVELED WAY. SEE DETAIL 5, SHEET RW-C3.1.
3. 18" SOLID WHITE THERMOPLASTIC ALTERNATING CROSSWALK BARS WHERE INDICATED ON PLAN. BARS ARE TO BE 18" WIDE AND SPACED 4' ON CENTER.
4. PAINT WHITE PARKING STALL STRIPING WITH WHITE PAINT WHERE INDICATED ON PLAN, AND IN ACCORDANCE WITH SECTION 842 OF THE KENTUCKY DEPARTMENT OF TRANSPORTATION STANDARD SPECIFICATIONS FOR ROAD AND BRIDGE CONSTRUCTION.
5. PAINT BLUE STANDARD ACCESSIBLE PARKING STALL STRIPING ON ASPHALT PAVEMENT WHERE INDICATED ON PLAN AND PER DETAIL 6 AND DETAIL 8, SHEET RW-C3.1.
6. PAINT BLUE "VAN ACCESSIBLE" PARKING STALL STRIPING ON ASPHALT PAVEMENT WHERE INDICATED ON PLAN AND PER DETAIL 6 AND DETAIL 7, SHEET RW-C3.1.

0 100' 200'

Key Plan

Seals

STATE OF KENTUCKY
ROBERT D. MARTIN
15958
LICENSED
PROFESSIONAL ENGINEER
Robert D. Martin
5/8/13

Engineering
Planning
1046 East Chestnut Street, Louisville, Kentucky 40204
Phone: 502-585-2222 Internet: www.gk4.com
Kentucky • Indiana • Georgia • Tennessee • Florida

LANDSCAPE ARCHITECT
WRT
Wallace Roberts & Todd, LLC
1700 Market Street
28th Floor
Philadelphia, PA 19103
tel 215.732.5215
fax 215.732.2551

Architect
BRAVURA
111 West Washington Street
Louisville, Kentucky 40202
T: (502) 584-9900
F: (502) 584-0829

The Parklands of Floyds Fork, Project 4A

The Strand, Turkey Run Park and Broad Run
Louisville, Kentucky

Owner:
21st Century Parks, Inc.
371 W. Main St., Suite 202
Louisville, Kentucky 40202

REV #	DATE	DESCRIPTION
1	05-23-2013	Addendum #1: Removed stop sign. Added detail references

Job No:	12300.4AC
Date:	May 8, 2013
Scale:	1" = 100'
Drawn By:	

BID SET

Drawing Title:
Parklands of Floyds Fork

PROJECT 4A
Regulatory Signage and Striping Plan

Drawing No:
RS-C1.3

May 21, 2013 - 5:29pm
U:\12300.4AC - 21st Century Parks Phase 4A\SITE\Dwgs\CDoc\12300.4AC-SIGNAGE AND STRIPING.dwg (RS-C1.3)

KEYNOTES (Striping)

1. DOUBLE YELLOW THERMOPLASTIC CENTERLINE STRIP WHERE INDICATED ON PLAN AND IN ACCORDANCE WITH THE MUTCD.
2. 18" THERMOPLASTIC STOP BAR AND "STOP" LETTERS. STRIPING TO BE SOLID WHITE REFLECTIVE PER MUTCD. STOP BARS SHOULD BE PLACED 4 FEET FROM THE NEAREST EDGE OF THE INTERSECTION TRAVELED WAY. SEE DETAIL 5, SHEET RW-C3.1.
3. 18" SOLID WHITE THERMOPLASTIC ALTERNATING CROSSWALK BARS WHERE INDICATED ON PLAN. BARS ARE TO BE 18" WIDE AND SPACED 4' ON CENTER.
4. PAINT WHITE PARKING STALL STRIPING WITH WHITE PAINT WHERE INDICATED ON PLAN, AND IN ACCORDANCE WITH SECTION 842 OF THE KENTUCKY DEPARTMENT OF TRANSPORTATION STANDARD SPECIFICATIONS FOR ROAD AND BRIDGE CONSTRUCTION.
5. PAINT BLUE STANDARD ACCESSIBLE PARKING STALL STRIPING ON ASPHALT PAVEMENT WHERE INDICATED ON PLAN AND PER DETAIL 6 AND DETAIL 8, SHEET RW-C3.1.
6. PAINT BLUE "VAN ACCESSIBLE" PARKING STALL STRIPING ON ASPHALT PAVEMENT WHERE INDICATED ON PLAN AND PER DETAIL 6 AND DETAIL 7, SHEET RW-C3.1.

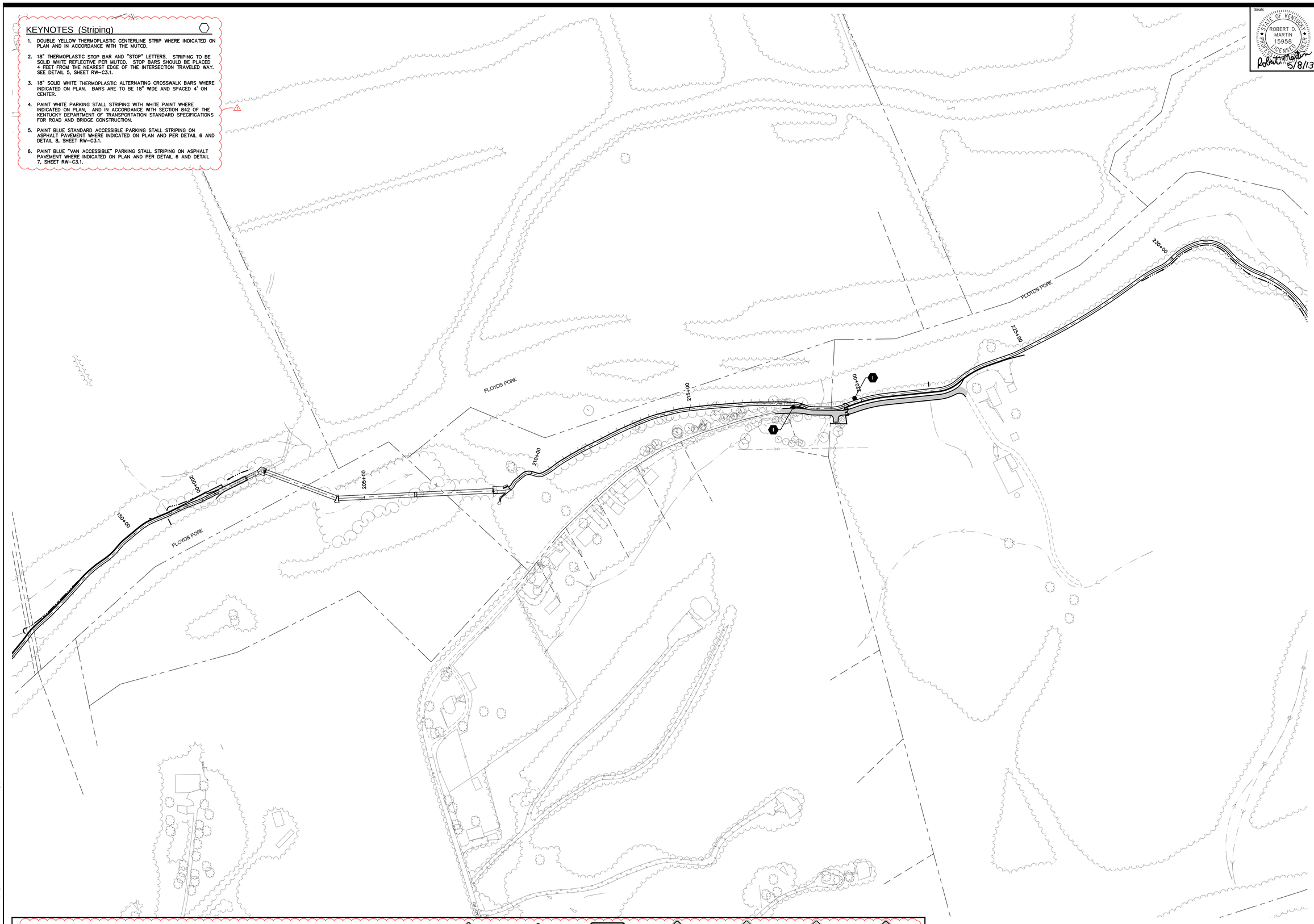

STOP	YIELD	SPEED LIMIT 25	HERE TO PEDESTRIANS	RESERVED PARKING	VAN ACCESSIBLE		TRAIL MARKER AHEAD	STEEP GRADE				Share The Road
MUTCD: R1-1 24"x24" PER DETAIL 1 OR 2, SHEET RS-C3.1	MUTCD: R1-2 30"x30"x30" 5' MOUNTING HEIGHT SIMILAR TO DETAIL 1, SHEET RS-C3.1	MUTCD: R2-1 18"x24" PER DETAIL 4, SHEET RS-C3.1	MUTCD: R1-5A 18"x24" 7' MOUNTING HEIGHT SIMILAR TO DETAIL 4, SHEET RS-C3.1	MUTCD: W7-8 18"x24" PER DETAIL 3, SHEET RS-C3.1	MUTCD: R7-8B 18"x9" PER DETAIL 3, SHEET RS-C3.1	MUTCD: W7-5 18"x18" 7' MOUNTING HEIGHT, POST TO BE PLACED 3' OFF EDGE OF LOOP SIMILAR TO DETAIL 4, SHEET RS-C3.1	MUTCD: W5 18"x18" 7' MOUNTING HEIGHT, POST TO BE PLACED 3' OFF EDGE OF LOOP SIMILAR TO DETAIL 4, SHEET RS-C3.1	MUTCD: W7-3P 24"x18" 7' MOUNTING HEIGHT, POST TO BE PLACED 3' OFF EDGE OF LOOP SIMILAR TO DETAIL 4, SHEET RS-C3.1	MUTCD: W1-5 30"x30" 7' MOUNTING HEIGHT SIMILAR TO DETAIL 1, SHEET RS-C3.1	MUTCD: W1-10 30"x30" 7' MOUNTING HEIGHT SIMILAR TO DETAIL 1, SHEET RS-C3.1	MUTCD: W1-5 30"x30" 7' MOUNTING HEIGHT SIMILAR TO DETAIL 1, SHEET RS-C3.1	30"x30" 7' MOUNTING HEIGHT SIMILAR TO DETAIL 4, SHEET RS-C3.1
A	B	C	D	E	F	G	H	I	J	K	L	M

0 100' 200'

Key Plan

Seals

STATE OF KENTUCKY ROBERT D. MARTIN 15958 LICENSED PROFESSIONAL ENGINEER

Robert D. Martin 5/8/13

Engineering
Planning

1046 East Chestnut Street, Louisville, Kentucky 40204
(502) 584-9900 www.bravura-llc.com
Kentucky • Indiana • Georgia • Tennessee • Florida

LANDSCAPE ARCHITECT

WRT

Wallace Roberts & Todd, LLC

1700 Market Street
28th Floor
Philadelphia, PA 19103

tel 215.732.5215
fax 215.732.2551

Architect

BRAVURA

111 West Washington Street
Louisville, Kentucky 40202
T: (502) 584-9900
F: (502) 584-0829

The Parklands of Floyds Fork, Project 4A

The Strand, Turkey Run Park and Broad Run

Louisville, Kentucky

Owner:
21st Century Parks, Inc.
371 W. Main St., Suite 202
Louisville, Kentucky 40202

REV #	DATE	DESCRIPTION
1	05-23-2013	Addendum #1: Added detail references

Job No:	12300.4AC
Date:	May 8, 2013
Scale:	1" = 100'
Drawn By:	

BID SET

Drawing Title:

Parklands of Floyds Fork

PROJECT 4A
Regulatory Signage and Striping Plan

Drawing No:

RS-C1.2

May 21, 2013 – 5:29pm
V:\12300.4AC – 21st Century Parks Phase 4A\SITE\Dwgs\Cdxc\12300.4AC–SIGNAGE AND STRIPING.dwg (RS–C1.2)

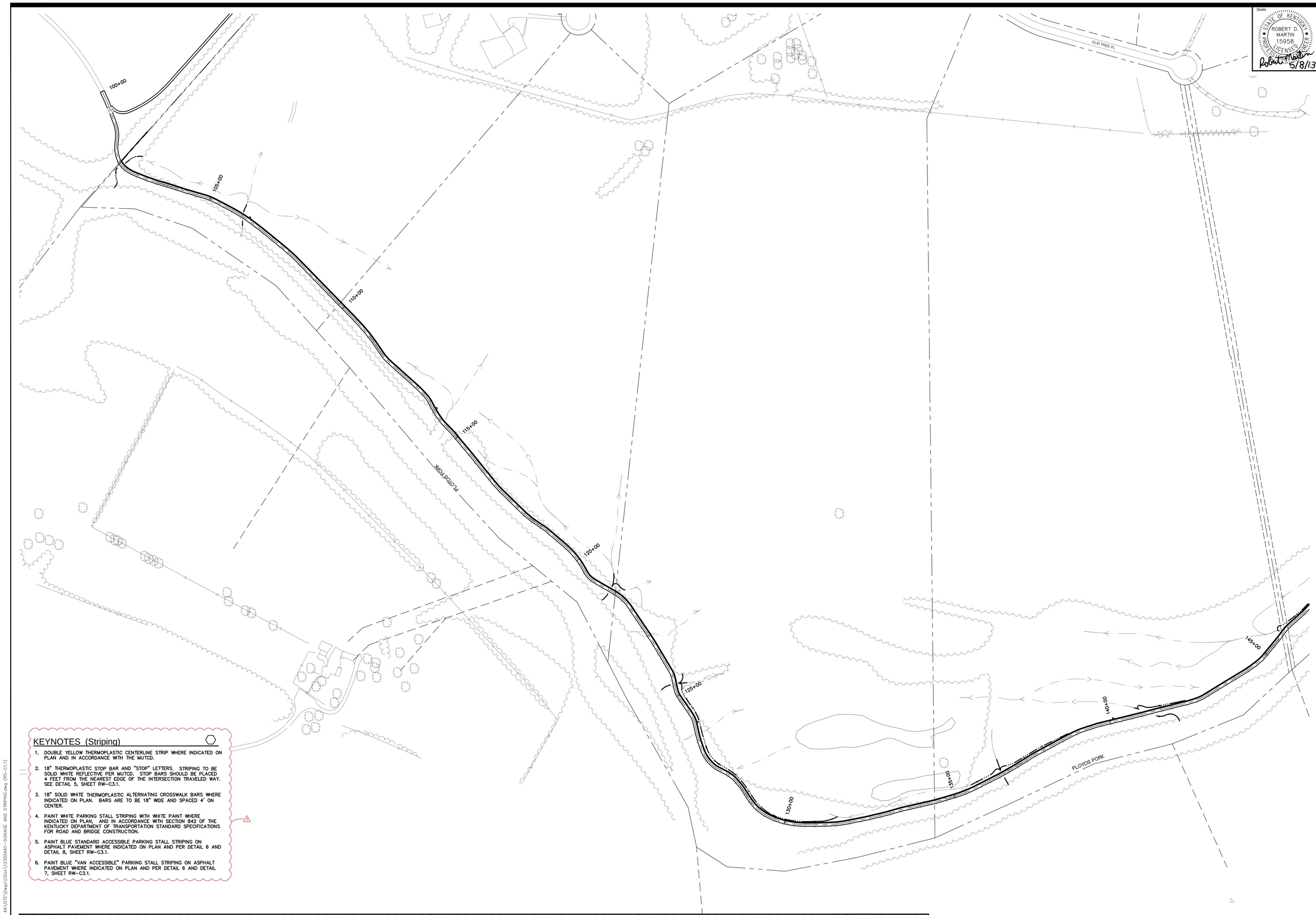

KEYNOTES (Striping)

1. DOUBLE YELLOW THERMOPLASTIC CENTERLINE STRIP WHERE INDICATED ON PLAN AND IN ACCORDANCE WITH THE MUTCD.
2. 18" THERMOPLASTIC STOP BAR AND "STOP" LETTERS. STRIPING TO BE SOLID WHITE REFLECTIVE PER MUTCD. STOP BARS SHOULD BE PLACED 4 FEET FROM THE NEAREST EDGE OF THE INTERSECTION TRAVELED WAY. SEE DETAIL 5, SHEET RW-C3.1.
3. 18" SOLID WHITE THERMOPLASTIC ALTERNATING CROSSWALK BARS WHERE INDICATED ON PLAN. BARS ARE TO BE 18" WIDE AND SPACED 4' ON CENTER.
4. PAINT WHITE PARKING STALL STRIPING WITH WHITE PAINT WHERE INDICATED ON PLAN, AND IN ACCORDANCE WITH SECTION 842 OF THE KENTUCKY DEPARTMENT OF TRANSPORTATION STANDARD SPECIFICATIONS FOR ROAD AND BRIDGE CONSTRUCTION.
5. PAINT BLUE STANDARD ACCESSIBLE PARKING STALL STRIPING ON ASPHALT PAVEMENT WHERE INDICATED ON PLAN AND PER DETAIL 6 AND DETAIL 8, SHEET RW-C3.1.
6. PAINT BLUE "VAN ACCESSIBLE" PARKING STALL STRIPING ON ASPHALT PAVEMENT WHERE INDICATED ON PLAN AND PER DETAIL 6 AND DETAIL 7, SHEET RW-C3.1.

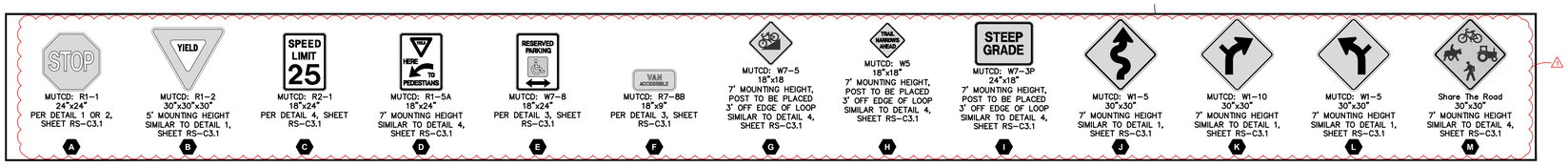

0 100' 200'

Key Plan

Seals

STATE OF KENTUCKY
ROBERT D. MARTIN
15958
LICENSED
PROFESSIONAL ENGINEER

Robert D. Martin 5/8/13

Engineering
Planning

1046 East Chestnut Street, Louisville, Kentucky 40204
Phone: 502.584.9922 Fax: 502.584.9229
Kentucky • Indiana • Georgia • Tennessee • Florida

LANDSCAPE ARCHITECT
WRT
Wallace Roberts & Todd, LLC
1700 Market Street
28th Floor
Philadelphia, PA 19103
tel 215.732.5215
fax 215.732.2551

Architect
BRAVURA
111 West Washington Street
Louisville, Kentucky 40202
T: (502) 584-9900
F: (502) 584-0829

The Parklands of Floyds Fork, Project 4A

The Strand, Turkey Run Park and Broad Run
Louisville, Kentucky

Owner:
21st Century Parks, Inc.
371 W. Main St., Suite 202
Louisville, Kentucky 40202

REV #	DATE	DESCRIPTION
1	05-23-2013	Addendum #1: Added detail references

Job No:	12300.4AC
Date:	May 8, 2013
Scale:	1" = 100'
Drawn By:	

BID SET

Drawing Title:

Parklands of Floyds Fork

PROJECT 4A
Regulatory Signage and Striping Plan

Drawing No:

RS-C1.1

May 21, 2013 – 5:29pm
U:\12300.4AC – 21st Century Parks Phase 4A\SITE\Dwgs\Cdrs\12300.4AC-SIGNAGE AND STRIPING.dwg (RS-C1.1)

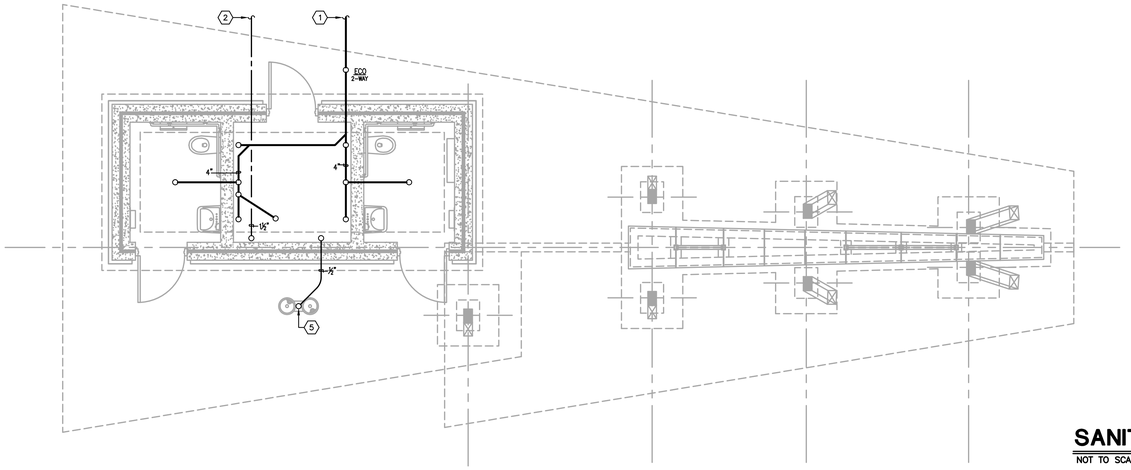

FLOOR PLAN - UNDERSLAB PLUMBING

SCALE: 1/4" = 1'-0"

1 / P1-101

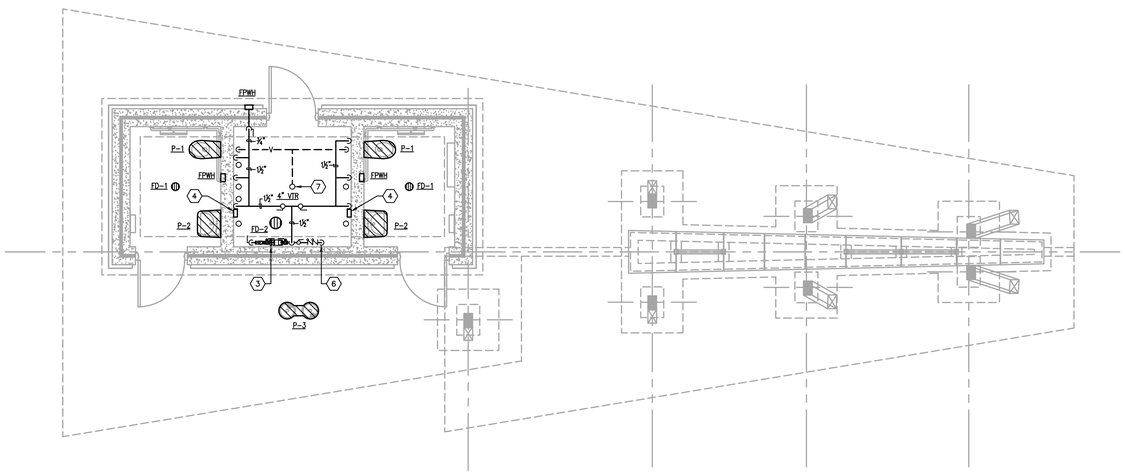

FLOOR PLAN - ABOVE SLAB PLUMBING

SCALE: 1/4" = 1'-0"

2 / P1-101

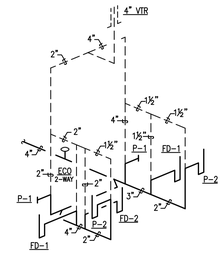

SANITARY WASTE AND VENT RISER DIAGRAM

NOT TO SCALE

3 / P1-101

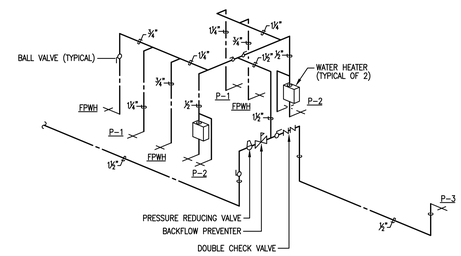

DOMESTIC WATER RISER DIAGRAM

NOT TO SCALE

4 / P1-101

PLUMBING TAG NOTES: #

1. 4" SANITARY SEWER OUT TO SITE 5'-0". REFERENCE CIVIL ENGINEER'S DRAWINGS FOR CONTINUATION.
2. 1-1/2" DOMESTIC WATER OUT TO SITE 5'-0". REFERENCE CIVIL ENGINEER'S DRAWINGS FOR CONTINUATION.
3. FURNISH AND INSTALL MAIN SHUT-OFF VALVE, PRESSURE REDUCING VALVE, AND 1-1/2" WATTS MODEL 909 BACKFLOW PREVENTER WITH STRAINER OR EQUAL. EXTEND DISCHARGE LINE TO FLOOR DRAIN AND SPILL.
4. FURNISH AND INSTALL EEMAX MODEL SP35 INSTANTANEOUS WATER HEATER OR EQUAL. HEATER SHALL BE 240V/1ø/60, 3.5 KW, AND CAPABLE OF A 48°F TEMPERATURE RISE AT 0.5 GPM.
5. EXTEND 1/2" CW LINE UP FROM BELOW GRADE TO DRINKING FOUNTAIN AND CONNECT. REFERENCE EXTERIOR DRINKING FOUNTAIN DETAIL ON THIS SHEET FOR DRAIN LINE AND ADDITIONAL INFORMATION.
6. 1/2" CW LINE DOWN TO BELOW SLAB. REFERENCE UNDERSLAB PLAN ON THIS SHEET FOR CONTINUATION. FURNISH AND INSTALL WATTS MODEL 007 DOUBLE CHECK VALVE IN WATER LINE SERVING THE DRINKING FOUNTAIN.
7. REFERENCE ARCHITECTURAL ROOF PLAN FOR EXACT LOCATION OF VENT THROUGH ROOF.

PLUMBING LEGEND

ABOVE FINISHED FLOOR	AFF
CAST IRON	CI
CLEANOUT	CO
COLD WATER	CW
ELECTRICAL CONTRACTOR	EC
FLOOR DRAIN	FD
FREEZE PROOF WALL HYDRANT	FPWH
GENERAL CONTRACTOR	GC
HOT WATER	HW
MECHANICAL CONTRACTOR	MC
NOT TO SCALE	NTS
OPEN RECEPTACLE	OR
PLUMBING CONTRACTOR	PC
POLYVINYL CHLORIDE	PVC
SEWAGE EJECTOR PUMP	SEP
TYPICAL	TYP
VENT THROUGH ROOF	VTR
WATER HAMMER ARRESTOR	WHA
WATER HEATER	WH
SANITARY PIPING	SAN
SANITARY VENT PIPING	V
DOMESTIC COLD WATER PIPING	
DOMESTIC HOT WATER PIPING (110° F)	
UNION	
GATE VALVE	
CHECK VALVE	
DOUBLE CHECK VALVE ASSEMBLY	
BALL VALVE	
BALL VALVE IN RISER	
PIPING ELBOW (TURNED UP/DOWN)	
PIPING TEE (TURNED UP/DOWN)	
REDUCED PRESSURE BACKFLOW PREVENTER	
PRESSURE REDUCING VALVE	

PLUMBING FIXTURE SCHEDULE

DESIGNATOR	FIXTURE	CW	HW	SAN	VENT
P-1	WATER CLOSET – FLUSH VALVE – WALL-HUNG – CONCEALED PUSHBUTTON FLUSH VALVE – ADA	1¼"	--	4"	2"
P-2	LAVATORY – WALL-HUNG – METERING FAUCET – ADA	½"	½"	1½"	1½"
P-3	BI-LEVEL DRINKING FOUNTAIN – ADA – EXTERIOR	½"	--	1½"	1½"
FPWH	FREEZE-PROOF WALL HYDRANT	¾"	--	--	--
FD-1	TOILET ROOM FLOOR DRAIN	--	--	3"	1½"
FD-2	MECHANICAL ROOM FLOOR DRAIN	--	--	4"	2"

NOTES:

1. PIPE SIZES ARE AS INDICATED UNLESS OTHERWISE NOTED ON FLOOR PLANS AND RISER DIAGRAMS.
2. MINIMUM 2" SANITARY PIPING UNDERGROUND.

PROVIDE ALL REQUIRED PIPING TO FIXTURES INDICATED ON THE FLOOR PLANS, INDICATED WITH A "P" DESIGNATION. PROVIDE PIPING OF SIZE INDICATED IN THIS SCHEDULE.

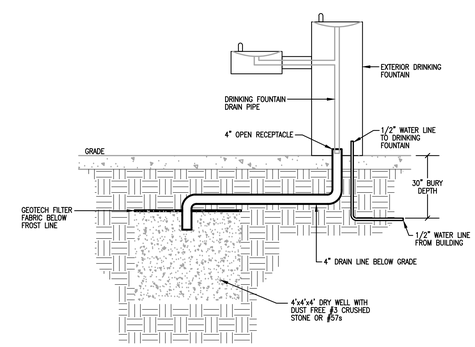

EXTERIOR DRINKING FOUNTAIN DETAIL

NOT TO SCALE

STATE OF KENTUCKY
JESS EDWARDS FARBER
20126
LICENSED
PROFESSIONAL ENGINEER

Architecture
Engineering
Planning

815 West Market Street, Suite 200, Louisville, Kentucky 40202
Phone: 502.585.1992 Fax: 502.585.1994 www.wdpartners.com
Kentucky • Indiana • Georgia • West Virginia • Tennessee • Florida

MEP ENGINEERING CONSULTANTS
10411 Meeting Street
Prospect, Kentucky 40059
502 228-4851 • 502 228-4891
www.centuraengr.com

Architect
BRAVURA
111 West Washington Street
Louisville, Kentucky 40202
T: (502) 584-9900
F: (502) 584-0829

The Parklands of Floyds Fork, Project 4A
The Strand, Turkey Run Park and Broad Run Park
Louisville, Kentucky

Owner:
21st Century Parks, Inc.
371 W. Main St., Suite 202
Louisville, Kentucky 40202

REV #	DATE	DESCRIPTION
	05/09/2013	ISSUED FOR BID
1	05/23/2013	ADDENDUM #1; REVISED TITLE TO READ, "ADD-ALT. NO.2"

Job No:	155-617
Date:	May 23, 2013
Scale:	As Shown
Drawn By:	
ISSUED FOR ADDENDUM #1	

Drawing Title:
1 Parklands of Floyds Fork
ADD-ALT. NO. 2
PROJECT 4A
The Strand
2-Hole Trailhead
Plans - Plumbing

Drawing No:
P1-101

GENERAL NOTES (APPLICABLE TO ALL DRAWINGS)

1. EACH CONTRACTOR, SUPPLIER AND, OR MANUFACTURER SHALL REFER TO ALL DOCUMENTS PERTAINING TO THIS PROJECT AND COORDINATE ACCORDINGLY SO AS TO ENSURE ADEQUACY OF FIT, COMPLIANCE WITH SPECIFICATIONS, PROPER VOLTAGE AND CURRENT CHARACTERISTICS AND AVOID CONFLICT WITH ANY OTHER BUILDINGS SYSTEMS. VERIFY SAME WITH SHOP DRAWINGS.
2. ALL OFFSETS, TURNS, FITTINGS, TRIM, DETAIL, ETC., MAY NOT BE INDICATED, BUT SHALL BE PROVIDED AS REQUIRED. ADDITIONAL ALLOWANCES SHALL BE INCLUDED FOR SAME AT EACH PROPOSERS' DISCRETION.
3. OBSERVE ALL APPLICABLE CODES, RULES AND REGULATIONS (CITY, COUNTY, LOCAL, STATE, FEDERAL, MUNICIPALITY, UTILITY COMPANY, OSHA, ETC.).
4. ALL SYSTEMS, EQUIPMENT AND MATERIALS ARE TO BE INSTALLED IN A NEAT AND WORKMANLIKE MANNER. WORK NOT DONE SO SHALL BE REMOVED AND REINSTALLED SATISFACTORILY.
5. WHERE MOUNTING HEIGHTS ARE NOT INDICATED OR ARE IN CONFLICT WITH ANY OTHER BUILDING SYSTEM, CONTACT THE ENGINEERS BEFORE INSTALLATION. REFER ALSO TO ARCHITECTURAL WALL INTERIOR AND EXTERIOR WALL ELEVATIONS, CEILING HEIGHTS AND OTHER DETAIL OF THESE DOCUMENTS.
6. DO NOT SCALE FROM DRAWINGS, PRINTING DISTORTS SCALE. WORK SHALL BE LAID OUT FROM DIMENSIONED DRAWINGS, OR DIMENSIONS SUPPLIED TO THE CONTRACTOR.
7. THIS CONTRACTOR SHALL BE RESPONSIBLE FOR ALL CUTTING AND PATCHING REQUIRED FOR HIS WORK. ALL CUTTING AND PATCHING SHALL MATCH ADJACENT SURFACES. REFER TO ARCHITECTURAL DRAWINGS FOR ADDITIONAL INFORMATION.
8. TURNING VANES SHALL BE INSTALLED IN ALL SUPPLY, RETURN, AND EXHAUST DUCT WORK ELBOWS. TURNING VANES NOT REQUIRED FOR KITCHEN EXHAUSTS.
9. THESE DRAWINGS ARE ACCURATE TO THE BEST OF OUR KNOWLEDGE, HOWEVER LOCATIONS, DEPTHS, ELEVATIONS AND SIZES WERE TAKEN FROM DIFFERENT SOURCES AND ARE SUBJECT TO DEVIATION. THE CONTRACTOR SHALL ASSUME SOME DEVIATIONS AND INCLUDE OFFSETS, ADDITIONAL PIPING, ETC AT THE TIME OF BID.
10. WHERE PENETRATING ROOFING MEMBRANE OR OTHER MATERIALS USED FOR WEATHERPROOFING THE BUILDING, MAKE SUCH PENETRATIONS IN A WAY THAT WILL NOT VOID OR DIMINISH THE ROOFING WARRANTY OR INTEGRITY IN ANY WAY. COORDINATE ALL SUCH PENETRATIONS WITH THE ROOFING INSTALLER.
11. ADVISE THE ENGINEERS OF ANY CONFLICTS, ERRORS, OMISSIONS, ETC. AT LEAST TEN DAYS PRIOR TO BID DATE, TO ALLOW CLARIFICATION BY WRITTEN ADDENDUM.
12. DEVIATION FROM SPECIFICATIONS OR PLANS REQUIRES PRIOR WRITTEN APPROVAL FROM THE ENGINEERS AND MUST BE SUBMITTED IN WRITING NO LATER THAN TEN DAYS PRIOR TO THE BID DATE.
13. COORDINATE THE LOCATION OF DRAINS, ELECTRICAL OUTLETS, ETC. WITH ALL MECHANICAL ROOM EQUIPMENT, ETC. PRIOR TO COMMENCING INSTALLATION. WORK NOT SO COORDINATED SHALL BE REMOVED AND PROPERLY INSTALLED AT THE EXPENSE OF THE RESPONSIBLE CONTRACTOR(S).
14. THE PURPOSE AND INTENT OF ALL THE DOCUMENTS PERTAINING TO THIS PROJECT IS TO PROVIDE A COMPLETE, FUNCTIONAL, SAFE, LIKE NEW FACILITY. ANYTHING LESS SHALL BE UNACCEPTABLE.
15. ANY VIBRATING, OSCILLATING OR OTHER NOISE OR MOTION PRODUCING EQUIPMENT SHALL BE ISOLATED FROM SURROUNDING SYSTEMS IN AN APPROVED MANNER. NOISY OR STRUCTURALLY DAMAGING INSTALLATIONS SHALL BE SATISFACTORILY REPLACED OR REPAIRED AT THE INSTALLING CONTRACTOR'S EXPENSE. THE FINAL DECISION ON THE SUITABILITY OF A PARTICULAR INSTALLATION'S ACCEPTABILITY SHALL BE THAT OF THE ENGINEER.
16. INSTALL EQUIPMENT, MATERIALS, ETC. IN STRICT ACCORD WITH MANUFACTURER'S RECOMMENDATIONS AND DIRECTIONS. IF IN CONFLICT WITH THE DESIGN INDICATED IN CONTRACT DOCUMENTS, ADVISE THE ENGINEERS PRIOR TO INSTALLATION FOR CLARIFICATION.
17. ALL SUPPORTS FOR EQUIPMENT, DEVICES OR FIXTURES SHALL BE UNIQUE, FROM THE BUILDING STRUCTURE. DO NOT SUPPORT WORK FROM OTHER TRADES, EQUIPMENT OR SUPPORTS WITHOUT WRITTEN PERMISSION FROM THE ENGINEER AND CONSENT OF THE OTHER TRADE, IN WRITING. REFER TO SEISMIC PROTECTION SPECIFICATIONS.
18. DEVIATIONS IN SIZE, CAPACITIES, FIT, FINISH, ETC. FOR EQUIPMENT FROM THAT PRIME SPECIFIED SHALL BE THE RESPONSIBILITY OF THE PURCHASER OF THAT EQUIPMENT. ANY PROVISIONS REQUIRED TO ACCOMMODATE A DEVIATION, WHETHER APPROVED BY THE ENGINEERS OR NOT, SHALL BE THE RESPONSIBILITY OF THE PURCHASER.
19. THE GENERAL CONTRACTOR FOR THIS CONSTRUCTION IS RESPONSIBLE FOR THE COORDINATION, APPEARANCE, SCHEDULING AND TIMELINESS OF THE WORK OF ALL TRADES, CONTRACTORS, SUPPLIERS, INSTALLERS, ETC.
20. VALVES, BALANCING DAMPERS OR ANY MECHANICAL/ELECTRICAL ITEM SHALL NOT BE LOCATED ABOVE A HARD CEILING. IF THIS IS NOT POSSIBLE, THEN AN APPROPRIATELY SIZED ACCESS DOOR SHALL BE PLACED UNDER THE ITEM TO ALLOW EASY MAINTENANCE AND ADJUSTMENT.
21. THE GENERAL CONTRACTOR SHALL ENSURE PROPER COORDINATION BETWEEN ALL TRADES SUCH THAT CONDUITS, PIPING, DUCTWORK, ETC. DO NOT BLOCK ACCESS TO VALVES, EQUIPMENT, DUCT ACCESS DOORS, ETC. ITEMS THAT HAVE BEEN INSTALLED WHERE ACCESS IS COMPROMISED SHALL BE RELOCATED AT THE CONTRACTOR'S EXPENSE.

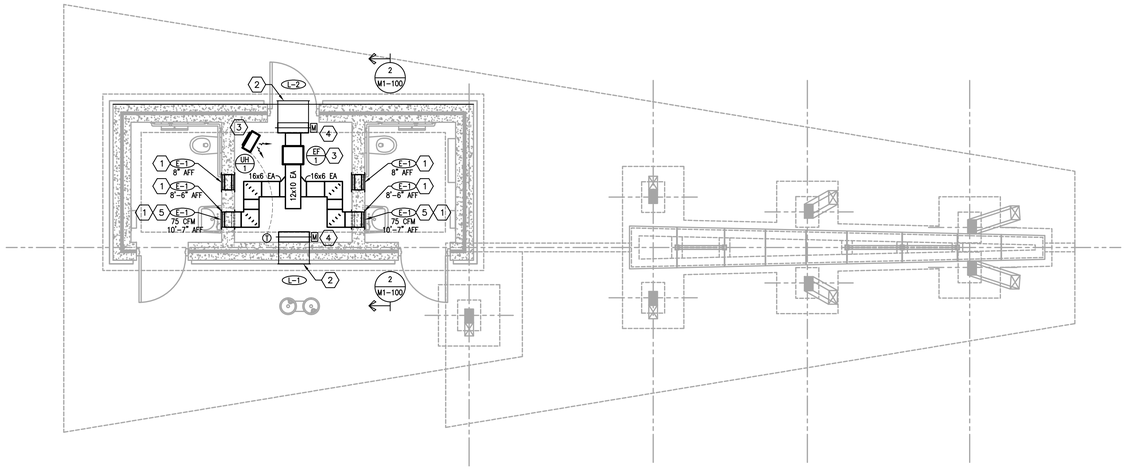

FLOOR PLAN - MECHANICAL

SCALE: 1/4" = 1'-0"

1 / M1-100

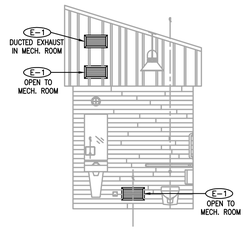

INTERIOR ELEVATION

SCALE: 1/4" = 1'-0"

2 / M1-100

MECHANICAL LEGEND

AFC	ABOVE FINISHED CEILING
AFF	ABOVE FINISHED FLOOR
EAC	EXPOSED AT CEILING
BF	BELOW FLOOR
TYP	TYPICAL
NTS	NOT TO SCALE
NIC	NOT IN CONTRACT
NO	NORMALLY OPEN
NC	NORMALLY CLOSED
	TAGGED NOTE
	OPPOSED BLADE DAMPER (MOTORIZED)
	VOLUME DAMPER (MANUAL)
T	THERMOSTAT
	MECHANICAL EQUIPMENT DESIGNATOR
	INDICATES AIR DISTRIBUTION DEVICE SPECIFICATION (L=LOUVER, T=TRANSFER GRILLE, S=SUPPLY DIFFUSER OR REGISTER, R=RETURN GRILLE OR REGISTER, E= EXHAUST GRILLE OR REGISTER)
20X12 SA	SUPPLY AIR DUCT – INSIDE DIMENSION – 20"HORZ.X12"VERT. (TURNED UP/DOWN)
20X12 RA	RETURN AIR DUCT – INSIDE DIMENSION – (TURNED UP/DOWN)
20X12 EA	EXHAUST AIR DUCT – INSIDE DIMENSION – (TURNED UP/DOWN)
AD	ACCESS DOOR IN BOTTOM OF DUCT
AD	ACCESS DOOR IN SIDE OF DUCT

GRILLE AND LOUVER SCHEDULE

SYMBOL	L-1	L-2	E-1
MANUF. & MODEL	RUSKIN ELF520DD	RUSKIN ELF520DD	TITUS 350R-SS
TYPE	SIGHT PROOF DRAINABLE	SIGHT PROOF DRAINABLE	3/4" SPACE 45° DEFL
CONSTRUCTION	ALUMINUM	ALUMINUM	304 SS
DUTY	INTAKE	EXHAUST	TRANSFER EXHAUST
NECK SIZE	32X6	32X6	16X6
FACE SIZE	--	--	18X8
CFM	300	300	300
FREE AREA	49%	49%	--
FINISH	1	1	1
BIRD SCREEN	YES	YES	NO

REMARKS:
1. CUSTOM LOUVER FINISH AS SELECTED BY ARCHITECT.

ELECTRIC UNIT HEATER SCHEDULE

GENERAL	
SYMBOL	EUH-1
MANUF. & MODEL	MARKEL 5100 SERIES
CAPACITY	
HEAT OUTPUT (BTUH)	26,500
WATTS	8 KW
V/ø/Hz	240/1/60
ACCESSORIES	
WALL MOUNTED THERMOSTAT	YES

EXHAUST FAN SCHEDULE

SYMBOL	EF-1
MANUF. & MODEL	LOREN COOK GC-164
TYPE	IN-LINE
CFM/ESP	150/0.5
DRIVE/FAN RPM	DIRECT / 735
WATTS	145
V/ø/Hz	115/1/60
SONES	4
REMARKS	ALL

REMARKS:
1. IN-LINE INSTALLATION KIT
2. FAN SPEED CONTROL (MOUNT TO FAN HOUSING)
3. FLEXIBLE DUCT CONNECTION AT INLET AND OUTLET.
4. INTERLOCK FAN OPERATION WITH OCCUPANCY SENSOR IN EACH TOILET ROOM AND BOTH 24 VOLT LOUVER MOTORIZED DAMPER ACTUATORS (PROVIDE 120-24V TRANSFORMER). EXTEND 120V BRANCH CIRCUIT WIRING FROM TRANSFORMER TO LOCAL 120V POWER SOURCE. INSTALL PER DIVISION 26 REQUIREMENTS.

TAG NOTES: XX

1. PROVIDE A SHEET METAL PLENUM BETWEEN E-1 GRILLES. REFER TO ARCHITECTURAL INTERIOR ELEVATIONS FOR EXACT GRILLE LOCATION.
2. PROVIDE A 32X6 OA/EA PLENUM AT LOUVER. REFER TO ARCHITECTURAL EXTERIOR ELEVATIONS FOR EXACT LOUVER LOCATIONS.
3. EUH MOUNTED ON WALL. BOTTOM OF HEATER 8'-0" AFF.
4. 32x6 MOTORIZED DAMPER EQUAL TO RUSKIN CDTI-50 LOW TEMPERATURE CONTROL DAMPER. FOAM INJECTED BLADES AND THERMAL ISOLATED BREAKS. INTERLOCK DAMPER OPERATION WITH EXHAUST FAN.

STATE OF KENTUCKY
JESS EDWARDS FARBER
2012-
LICENSED
PROFESSIONAL ENGINEER

Architecture
Engineering
Planning
815 West Market Street, Suite 200, Louisville, Kentucky 40202
Phone: 502.582.9276 Fax: 502.582.9282 www.paulsen-web.com
Kentucky • Indiana • Georgia • West Virginia • Tennessee • Florida

MEP ENGINEERING CONSULTANTS
10411 Meeting Street,
Prospect, Kentucky 40059
502 228.4672 • 502 376-0695
www.cmtaegroup.com

Architect
BRAVURA
111 West Washington Street
Louisville, Kentucky 40202
T: (502) 584-9900
F: (502) 584-0829

The Parklands of Floyds Fork, Project 4A

The Strand, Turkey Run Park and Broad Run Park
Louisville, Kentucky

Owner:
21st Century Parks, Inc.
371 W. Main St., Suite 202
Louisville, Kentucky 40202

REV #	DATE	DESCRIPTION
	05/09/2013	ISSUED FOR BID
1	05/23/2013	ADDENDUM #1, REVISED TITLE TO READ, "ADD-ALT. NO.2"

Job No:	155-617
Date:	May 23, 2013
Scale:	As Shown
Drawn By:	

ISSUED FOR ADDENDUM #1

Drawing Title:
1 Parklands of Floyds Fork
ADD-ALT. NO. 2
PROJECT 4A
The Strand
2-Hole Trailhead
Plans-Mechanical

Drawing No:
M1-100

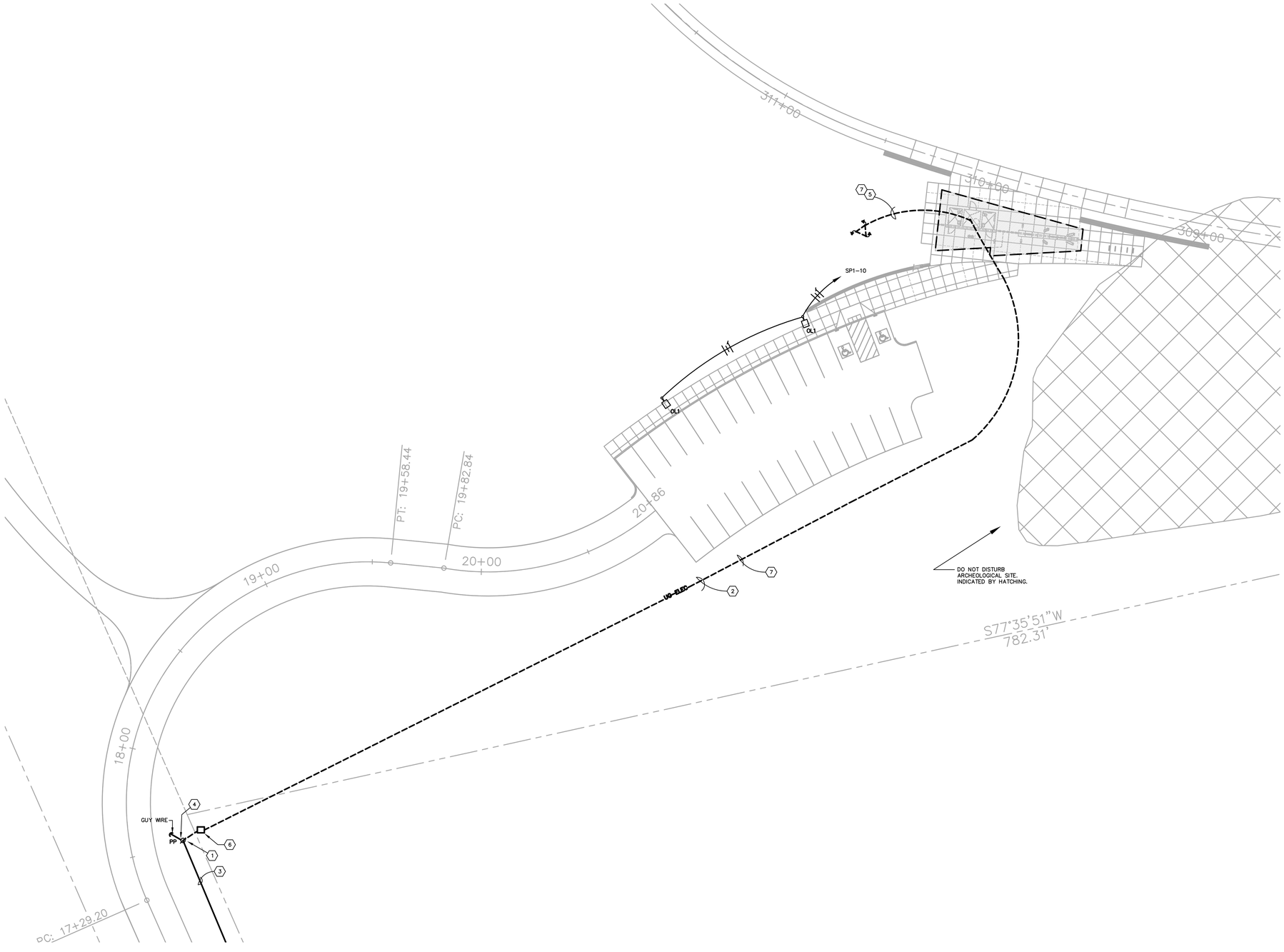

PARITAL SITE PLAN THE STRAND - ELECTRICAL

SCALE 1" = 20'

1 / E1-102

STATE OF KENTUCKY
BRIAN K. BAUMGARTLE
23119
LICENSED
PROFESSIONAL ENGINEER

SITE UTILITIES PLAN (GENERAL NOTES):

- DO NOT SCALE FROM MECHANICAL OR ELECTRICAL DRAWINGS. FIELD VERIFY REQUIRED DIMENSIONS.
- REFER TO ALL OTHER PLANS AND SPECIFICATIONS, BUT ESPECIALLY TO:
  - A) THE SITE SURVEY
  - B) THE ARCHITECTURAL SITE PLAN
  - C) THE SITE GRADING PLAN
  - D) THE PLANTING PLAN (WHERE AVAILABLE)
  - E) FOUNDATION PLAN(S)
  - F) APPROPRIATE MECHANICAL & ELECTRICAL FLOOR PLANS FOR SERVICE CONTINUATIONS
  - G) THE SITE UTILITY PLAN – MECHANICAL

  WHERE THERE ARE CONFLICTS AMONG PLANS AND/OR RELATED SPECIFICATIONS, ADVISE ENGINEER AT LEAST TWELVE DAYS PRIOR TO SUBMISSION OF BIDS.
- ALL FEES AND ANY OTHER COSTS TO UTILITY COMPANIES, MUNICIPALITIES, INSPECTORS, REVIEWING AGENCIES, ETC. ARE TO BE INCLUDED AS A PART OF THIS CONTRACT.
- CONTRACTOR SHALL CUT AND PATCH ALL PAVEMENT, CURBING, ETC. AS REQUIRED, FOR WORK. CONTRACTOR SHALL REPAIR ALL LANDSCAPING THAT IS DAMAGED FOR WORK.
- FEDERAL, STATE, LOCAL, MUNICIPALITY AND UTILITY COMPANY CODES, RULES, REGULATIONS AND REQUIREMENTS APPLY UNLESS EXCEEDED BY THIS DESIGN.
- WHEN INTERRUPTION OF AN EXISTING UTILITY OR SERVICES IS PLANNED OR OCCURS ACCIDENTALLY, THE CONTRACTOR(S) SHALL WORK CONTINUOUSLY AS NEEDED TO RESTORE SAME PROVIDING PREMIUM TIME AS NEEDED AT NO INCREASE IN THE CONTRACT PRICE.
- PLANNED INTERRUPTION OF ANY SERVICE SHALL BE COORDINATED WITH THE APPROPRIATE MUNICIPALITY OR UTILITY COMPANY, THE ARCHITECT AND THE BUILDING OPERATORS AT LEAST ONE WEEK IN ADVANCE OF ANTICIPATED INTERRUPTION. A SCHEDULE FOR THESE OUTAGES SHALL BE DEVELOPED AND AGREED UPON BETWEEN THE PARTIES MENTIONED TO AVOID UNNECESSARY INCONVENIENCE TO THE OWNER OR ANY AFFECTED PARTY. NOTIFY THE UTILITY COMPANY OF ANY ANTICIPATED SERVICES REQUIRED FROM THEM AT LEAST TWO WEEKS IN ADVANCE IN WRITING AND INSURE THAT THEY DO NOT DELAY WORK.
- LOCATIONS, DEPTHS, MATERIAL TYPES, ELEVATIONS, ETC. OF ALL APPURTENANCES, LINES, BUILDINGS, ETC. INDICATED ON THESE DRAWINGS WERE TAKE FROM VARIOUS SOURCES, ARE DIAGRAMMATIC ONLY AND ARE SUBJECT TO SUBSTANTIAL VARIATION FROM EXISTING CONDITIONS. EXISTING UTILITIES LOCATIONS MAY VARY (CONSEQUENTLY ALL CONTRACTORS SHALL EXERCISE EXTREME CARE IN THE COURSE OF THEIR WORK SO AS INSURE THAT THEY DO NOT INTERRUPT ANY EXISTING SERVICE. FOR SAFETY PURPOSES, PAY PARTICULAR ATTENTION TO THIS PRECAUTION RELATIVE TO NATURAL GAS AND ELECTRICAL LINES. ALL WORK SHALL BE PERFORMED IN ACCORD WITH ALL FEDERAL, STATE, AND/OR LOCAL RULES, REGULATIONS, STANDARDS AND SAFETY REQUIREMENTS. UTILITIES SHALL ALSO BE INSTALLED IN ACCORD WITH THE APPLICABLE MUNICIPALITY OR UTILITY COMPANY STANDARDS. IN ALL CASES, THE MOST STRINGENT REQUIREMENT SHALL APPLY. IF ANY VARIATION OCCURS, CONSULT THE BUILDING ENGINEER AND THE ELECTRICAL/MECHANICAL ENGINEER'S REPRESENTATIVE). CONTRACTOR SHALL VISIT SITE AND FIELD VERIFY THE ROUTING OF ALL UTILITIES NEW AND EXISTING PRIOR TO SUBMISSION OF BIDS. SUBMISSION OF A BID PROPOSAL INDICATES THAT THE CONTRACTOR IS FULLY AWARE OF ALL OBSTRUCTIONS AND WILL INSTALL ALL OF THE NEW UTILITIES WITHOUT REQUESTS FOR ANY ADDITIONAL CHANGES.
- CONTRACTOR SHALL PATCH AND REPAIR ALL LANDSCAPING THAT IS DISTURBED BY WORK OCCURRING IN THIS PROJECT AS REQUIRED.

PROTECTION OF TREES IS CRITICALLY IMPORTANT WITHIN ALL AREAS OF THE WORK. PRIOR TO ANY CLEARING, THE "LIMITS OF DISTURBANCE" FOR CONSTRUCTION OF ALL BUILDINGS, ARCHITECTURAL FEATURES, PLAZAS, AND UNDERGROUND UTILITIES SHALL BE STAKED BY THE CONTRACTOR, AND THE STAKED ALIGNMENTS SHALL BE REVIEWED BY THE OWNER'S DESIGNATED TREE PROTECTION REPRESENTATIVE. NO CLEARING OR CONSTRUCTION ACTIVITY SHALL OCCUR UNTIL THE AREAS TO BE DISTURBED ARE STAKED, REVIEWED AND APPROVED BY THE OWNER'S REPRESENTATIVE. CLEARING SHALL BE MINIMIZED AND STRICTLY LIMITED TO THE STAKED AND APPROVED AREAS OF DISTURBANCE. DURING CONSTRUCTION, THE CONTRACTOR SHALL AVOID USING ANY UNCLEARED WOODED AREAS OUTSIDE OF THE APPROVED AREAS OF DISTURBANCE FOR ACCESS, MATERIAL STORAGE OR PARKING.

TAGGED NOTES :

1. PROPOSED LOCATION FOR NEW UTILITY COMPANY POLE-MOUNTED SERVICE TRANSFORMER. CONTRACTOR SHALL PROVIDE SPLICE BOX PER UTILITY COMPANY REQUIREMENTS.COORDINATE EXACT MOUNTING LOCATION AND REQUIREMENTS WITH UTILITY COMPANY PRIOR TO ROUGH-IN.
2. PROVIDE NEW UNDERGROUND SECONDARY SERVICE LATERAL. REFER TO POWER DISTRIBUTION RISER DIAGRAM FOR SIZING. PROVIDE PER DUCT BANK DETAIL WITH A MINIMUM BURY OF 42" FROM TOP OF CONDUITS (FIELD VERIFY BEST ROUTING).
3. NEW LG&E OVERHEAD PRIMARY.
4. METER BASE PER UTILITY COMPANY REQUIREMENTS. REFER TO SHEET #UE-101 FOR MOUNTING DETAIL. INSTALL METER BASE 5'-0" FROM UTILITY POWER POLE.
5. PROVIDE ONE (1) #3/0 GROUND FROM PANELBOARD GROUND BAR TO THREE 5/8" x 10'-0" COPPERWELD GROUND RODS AS REQUIRED (REFER TO POWER DISTRIBUTION RISER ON SHEET #E1-401). CONTRACTOR SHALL TEST GROUND IMPEDANCE LEVEL AND IF NOT 1 Ohm, CONTRACTOR SHALL ADD GROUND RODS AS NECESSARY TO MEET THIS REQUIREMENT. FIELD VERIFY BEST LOCATION FOR GROUND RODS ON SITE PRIOR TO CONSTRUCTION. PLACE BARE GROUND BELOW SERVICE SECONDARIES WHERE RAN IN SAME TRENCH.
6. NEW SPLICE BOX PER LG&E REQUIREMENTS.
7. CONTRACTOR SHALL:
   - A. AVOID WATER LINE, OFFSET BY 10'-0"
   - B. STAY WITHIN PROPERTY LINE.
   - C. AVOID THE ARCHEOLOGY SITE.
   - D. AVOID EXISTING TREES.

Architecture
Engineering
Planning
515 West Market Street, Suite 200 Louisville, Kentucky 40202
Phone: 502-585-2222 Facsimile: 502-585-0606 Internet: www.q4.com
Kentucky • Indiana • Georgia • West Virginia • Tennessee • Florida

MEP ENGINEERING CONSULTANTS
10411 Meeting Street,
Prospect, Kentucky 40059
502 - 574 - 9100 (502 - 292 - 0289)
www.cmtaegrs.com

Architect
BRAVURA
111 West Washington Street
Louisville, Kentucky 40202
T: (502) 584-9900
F: (502) 584-0829

The Parklands of Floyds Fork, Project 4A
The Strand, Turkey Run Park and Broad Run Park
Louisville, Kentucky

Owner:
21st Century Parks, Inc.
371 W. Main St., Suite 202
Louisville, Kentucky 40202

REV #	DATE	DESCRIPTION
	05/09/2013	ISSUED FOR BID
1	05/23/2013	ADDENDUM #1, REVISED TITLE TO READ, "ADD-ALT. NO.2"

Job No:	155-617
Date:	May 23, 2013
Scale:	As Shown
Drawn By:	

ISSUED FOR ADDENDUM #1

Drawing Title:
1 Parklands of Floyds Fork
ADD-ALT. NO. 2
PROJECT 4A
The Strand
2-Hole Trailhead
Electrical Site Plan

Drawing No:
E1-102

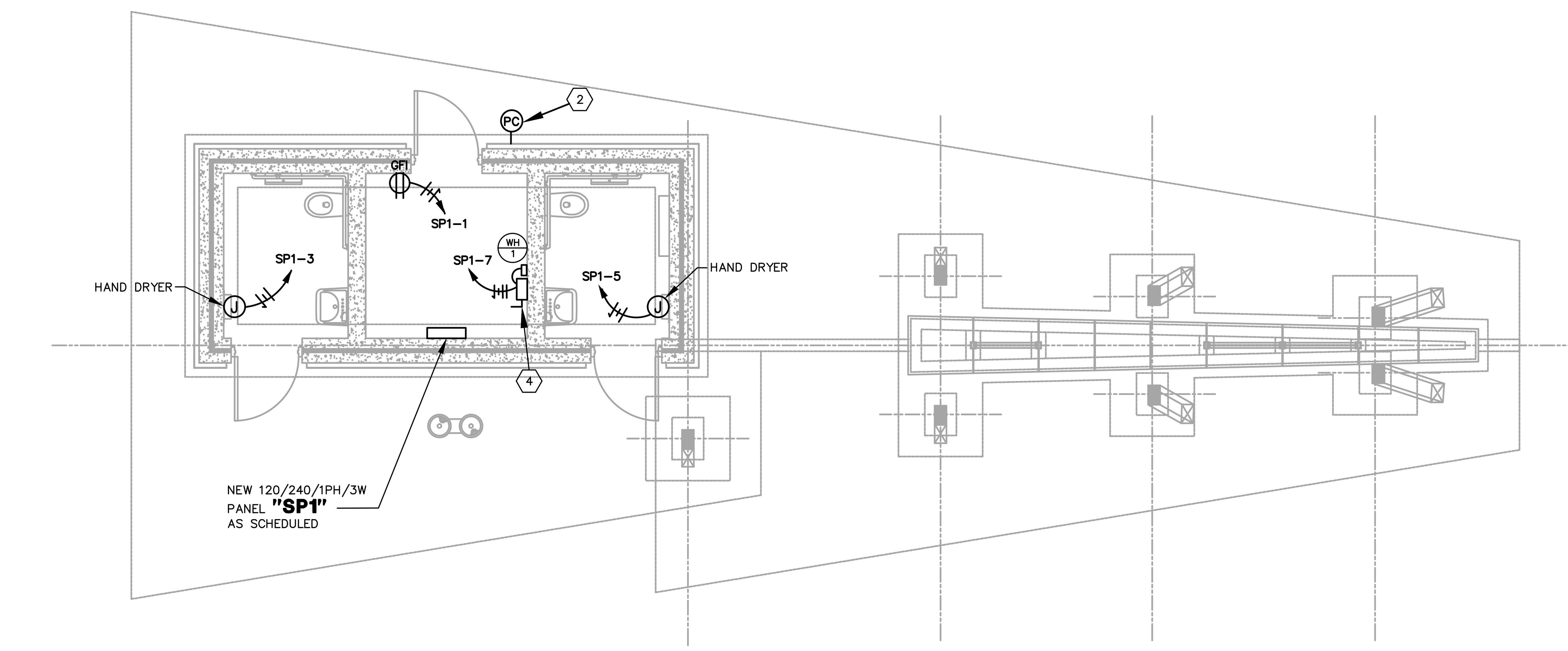

FLOOR PLAN - POWER/SYSTEMS

SCALE: 1/4" = 1'-0"

1 / E1-101

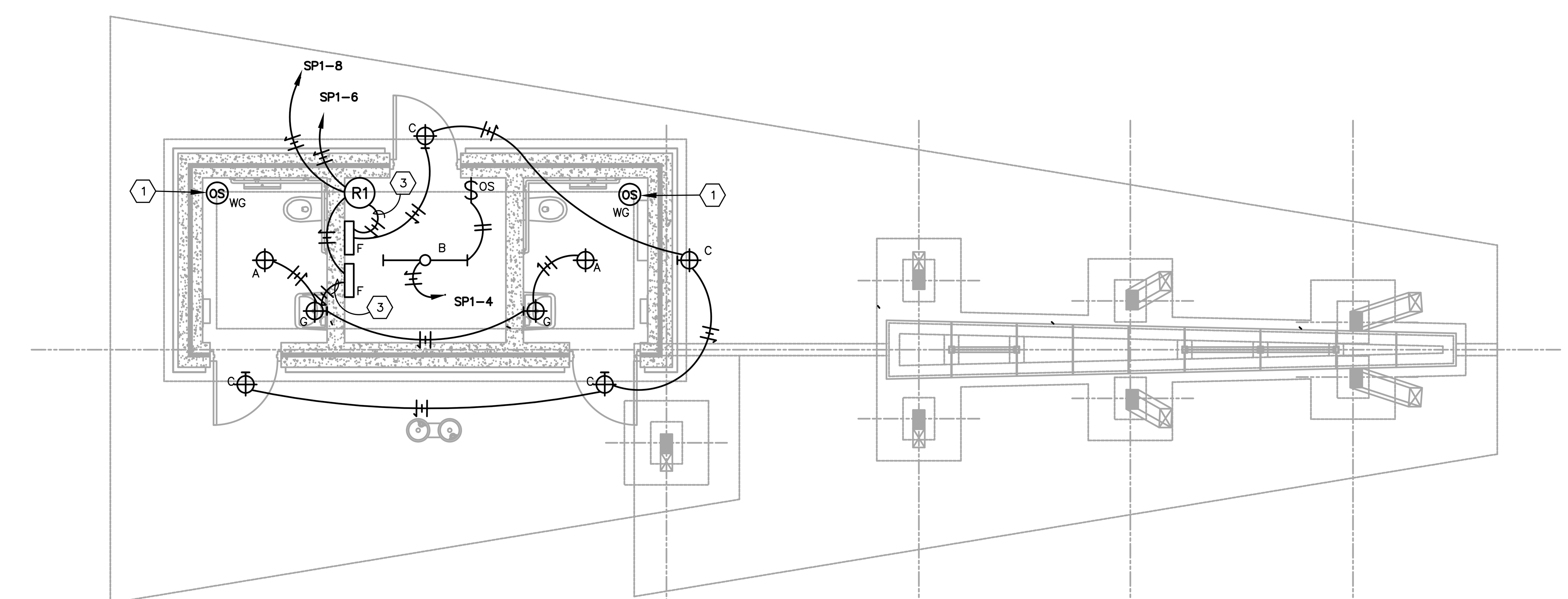

FLOOR PLAN - LIGHTING/POWER

SCALE: 1/4" = 1'-0"

2 / E1-101

GENERAL NOTES (LIGHTING/POWER/SYSTEMS) :

- REFER TO THE ARCHITECT'S REFLECTED CEILING PLANS FOR EXACT LOCATIONS OF ALL CEILING MOUNTED LIGHT FIXTURES, ETC. REFER ALSO TO THE ARCHITECT'S CASEWORK DETAILS AND ROOM ELEVATIONS FOR EXACT LOCATIONS AND MOUNTING HEIGHTS OF LIGHT FIXTURES, ETC.
- ALL NEW WIRING SHALL BE #12 WITH A #12 INSULATED GROUND WIRE (U.O.N.). CONDUIT SHALL BE 3/4" MINIMUM. PROVIDE #10 FOR 120V AC BRANCH CIRCUITS OVER 50 FEET IN LENGTH.
- CONTRACTOR SHALL FOLLOW BRANCH CIRCUITING LAY-OUT, AS INDICATED ON THE FLOOR PLANS, WITH A MAXIMUM OF THREE (3) BRANCH CIRCUITS PER HOMERUN. EACH BRANCH CIRCUIT SHALL BE PROVIDED WITH A DEDICATED NEUTRAL CONDUCTOR. DEDICATED NEUTRAL CONDUCTORS SHALL BE CONSIDERED CURRENT CARRYING. IF ADDITIONAL CONDUCTORS ARE ROUTED IN THE SAME CONDUIT WITH THOSE INDICATED, CONTRACTOR SHALL DE-RATE ALL CURRENT CARRYING CONDUCTORS PER N.E.C. #310.15(B)(2), AND UPSIZE CONDUIT AS REQUIRED PER N.E.C. #300.17 AND ANNEX C. MULTIWIRE BRANCH CIRCUITS AS DEFINED IN N.E.C #100 / 210.4 (CIRCUITS SHARING A COMMON NEUTRAL CONDUCTOR) SHALL NOT BE PERMITTED.
- CONTRACTOR SHALL REVIEW ALL ARCHITECTURAL ELEVATIONS FOR MOUNTING HEIGHTS AND LOCATIONS OF ALL WALL MOUNTED DEVICES.
- ELECTRICAL EQUIPMENT LAYOUT IS DIAGRAMATIC ONLY. SUBMIT COORDINATION DRAWINGS FOR APPROVAL PRIOR TO INSTALLATION.
- ALL EXPOSED CONDUIT SHALL BE PAINTED RIGID STEEL (GRS). GRS SHALL HAVE 1 COAT OF PRIMER AND 2 COATES OF PAINT. PAINT FINISH SHALL BE SELECTED BY THE ARCHITECT.

TAGGED NOTES :

1. INSTALL OCCUPANCY SENSOR ON CEILING WITH WIRE GUARD. WIREGUARD TO BE PAINTED TO MATCH CEILING. WIREGUARD TO BE MOUNTED WITH STAINLESS STEEL TORK HEAD SCREWS.
2. BUILDING MOUNTED PHOTOCELL. REFER TO ARCHITECTURAL ELEVATIONS FOR LOCATION AND SHEET E1-001 FOR FURTHER REQUIREMENTS
3. ROUTE UNSWITCHED HOT TO BATTERY BACK-UP INVERTER. ROUTE SWITCHED HOT THROUGH CONTACTOR PER DETAIL ON SHEET #E1-001.
4. PROVIDE FUSIBLE 60A/250V/2P HEAVY-DUTY DISCONNECT SWITCH IN NEMA-1 ENCLOSURE FOR CONNECTION TO WATER HEATER AS INDICATED. COORDINATE EXACT MOUNTING LOCATION AND CONNECTION REQUIREMENTS WITH MECHANICAL CONTRACTOR PRIOR TO ROUGH-IN. FUSE DISCONNECT SWITCH PER EQUIPMENT NAMEPLATE RATING. PROVIDE UNISTRUT AS REQUIRED FOR MOUNTING OF DISCONNECT SWITCH. FUSE PER UNIT NAMEPLATE

PANELBOARD AND WIRING SCHEDULE

PANELBOARD: SP1 AMPERES: 100 VOLTAGE: 120/240 PHASE: 1 WIRE: 3 MANUF.: SQUARE D TYPE: NQOD (30-POLE)

GND	CON	LOAD A		LOAD B	DESIGNATION	WIRE	BKR	CKT	CKT	BKR	WIRE	DESIGNATION	LOAD A		LOAD B	CON	GND
12	3/4"	0.2			MECH ROOM – RCP	12	20/1	1	2	20/1	12	SIGNAGE	0.5			3/4"	12
10	3/4"			2.3	HAND DRYER	10	30/1	3	4	20/1	12	MECH ROOM – LTG			0.1	3/4"	12
10	3/4"	2.3			HAND DRYER	10	30/1	5	6	20/1	12	R1	0.2			3/4"	12
10	3/4"			1.8	WATER HEATER	10	40/2	7	8	20/1	12	R1			0.2	3/4"	12
----	----	1.8			----------------	----	----	9	10	20/1	10	SITE – LTG	1.0			3/4"	10
					SPARE		20/1	11	12	20/1		SPARE					
					SPARE		20/1	13	14	20/1		SPARE					
					SPARE		20/1	15	16	20/1		SPARE					
					SPARE		20/1	17	18	20/1		SPARE					
					SPARE		20/1	19	20	20/1		SPARE					
					SPARE		20/1	21	22	20/1		SPARE					
					SPARE		20/1	23	24	20/1		SPARE					
					SPARE		20/1	25	26	20/1		SPARE					
					SPARE		20/1	27	28	20/1		SPARE					
					SPARE		20/1	29	30	20/1		SPARE					
					SPACE ONLY			31	32			SPACE ONLY					
					SPACE ONLY			33	34			SPACE ONLY					
					SPACE ONLY			35	36			SPACE ONLY					
					SPACE ONLY			37	38			SPACE ONLY					
					SPACE ONLY			39	40			SPACE ONLY					
					SPACE ONLY			41	42			SPACE ONLY					
		4.3		4.1	SUB-TOTAL KVA							KVA SUB-TOTAL	1.7		1.7	11.8	
												KVA GROSS-TOTAL	6.0		5.8		

EMERGENCY POWER: NO
BRANCH:
MAIN BREAKER: 225/2P
MAIN LUGS:
A.I.C. RATING: 65,000

POWER RISER TAGGED NOTES :

1. PROVIDE METER BASE PER LG&E REQUIREMENTS.
2. PROVIDE A PARALLEL CONNECTED TRANSIENT VOLTAGE SURGE SUPPRESSOR (TVSS), CATEGORY #B. UNIT SHALL BE CURRENT TECHNOLOGY #EGPE2 80, 120/240, 1ø, 3W OR APPROVED EQUAL. PROVIDE WITH OPTIONAL EVENT COUNTER. MOUNT BELOW PANEL BEING PROTECTED AS RECOMMENDED BY EQUIPMENT MANUFACTURER. ALIGN COVERS AND INSTALL WITHOUT GAP BETWEEN TVSS AND PANELBOARD.
3. PROVIDE ONE (1) #3/0 COPPER GROUNDING ELECTRODE FROM NEW GROUND BAR AT PANELBOARD "SP" TO THREE NEW 5/8" X 10'-0" COPPERWELD GROUND RODS AS REQUIRED. CONTRACTOR SHALL TEST GROUND SYSTEM IMPEDANCE LEVEL AND IF NOT 5 Ohm, CONTRACTOR SHALL ADD GROUND RODS AS NECESSARY TO MEET THIS REQUIREMENT. GROUNDS SHALL ALSO BE CONNECTED TO BUILDING STEEL AND COLD WATER PIPING PER NEC.

POWER RISER FEEDERS :

A. (1) 3" SCH 40 PRIMARY SERVICE CONDUIT AND (1) 3" SCH 40 SPARE CONDUIT. MINIMUM BURY AT 42". REFER TO UE-101 FOR ADDITIONAL REQUIREMENTS. MINIMUM BURY AT 42".
B. 3 #4/0, 1 #2 GROUND IN 2" SCHEDULE 40 PVC CONCRETE ENCASED CONDUITS (SCHEDULE #80 PVC WHERE EXPOSED AND FOR ELLS) WITH ONE ADDITIONAL EMPTY 3" SPARE CONDUIT. MINIMUM BURY AT 42".
C. 1 #3/0, BARE COPPER GROUND (ROUTE IN 1-1/4" CONDUIT WHERE EXPOSED).
D. 1 #3/0, BARE COPPER GROUND (ROUTE IN 1" CONDUIT WHERE EXPOSED).
E. 3 #8, 1 #10 GROUND IN 3/4" CONDUIT.
F. 3" SCHEDULE 40 PVC CONCRETE ENCASED CONDUIT (SCHEDULE #80 PVC WHERE EXPOSED AND FOR ELLS) STUBBED OUT 20' BEYOND TRANSFORMER. MINIMUM BURY AT 42".

POWER RISER GENERAL NOTES :

- ALL CONDUCTORS SHALL BE COPPER (SEE SPECIFICATIONS FOR TYPES).
- REFER TO DETAIL FOR TYPICAL PANEL LABELING REQUIREMENTS.
- AS PART OF THIS CONTRACT, PROVIDE A COORDINATION/FAULT CURRENT STUDY FOR BREAKERS ON THIS PROJECT. STUDY SHALL INCLUDE ALL MAINS AND FEEDERS SHOWN ON THESE DRAWINGS AND SHALL EXTEND TO THE MAIN LUGS OR BREAKER OF THE FURTHEST DEVICE DOWNSTREAM SUBMIT AS SHOP DRAWING TO ENGINEER PRIOR TO ORDERING ANY POWER DISTRIBUTION EQUIPMENT.
- AS PART OF THIS CONTRACT, PROVIDE A COMPREHENSIVE ARC FLASH HAZARD ANALYSIS FOR POWER DISTRIBUTION DEVICES ON THIS PROJECT. PROVIDE ALL LABELS, WARNING SIGNAGE, ETC. PER NPFA-70E AND OSHA REQUIREMENTS.

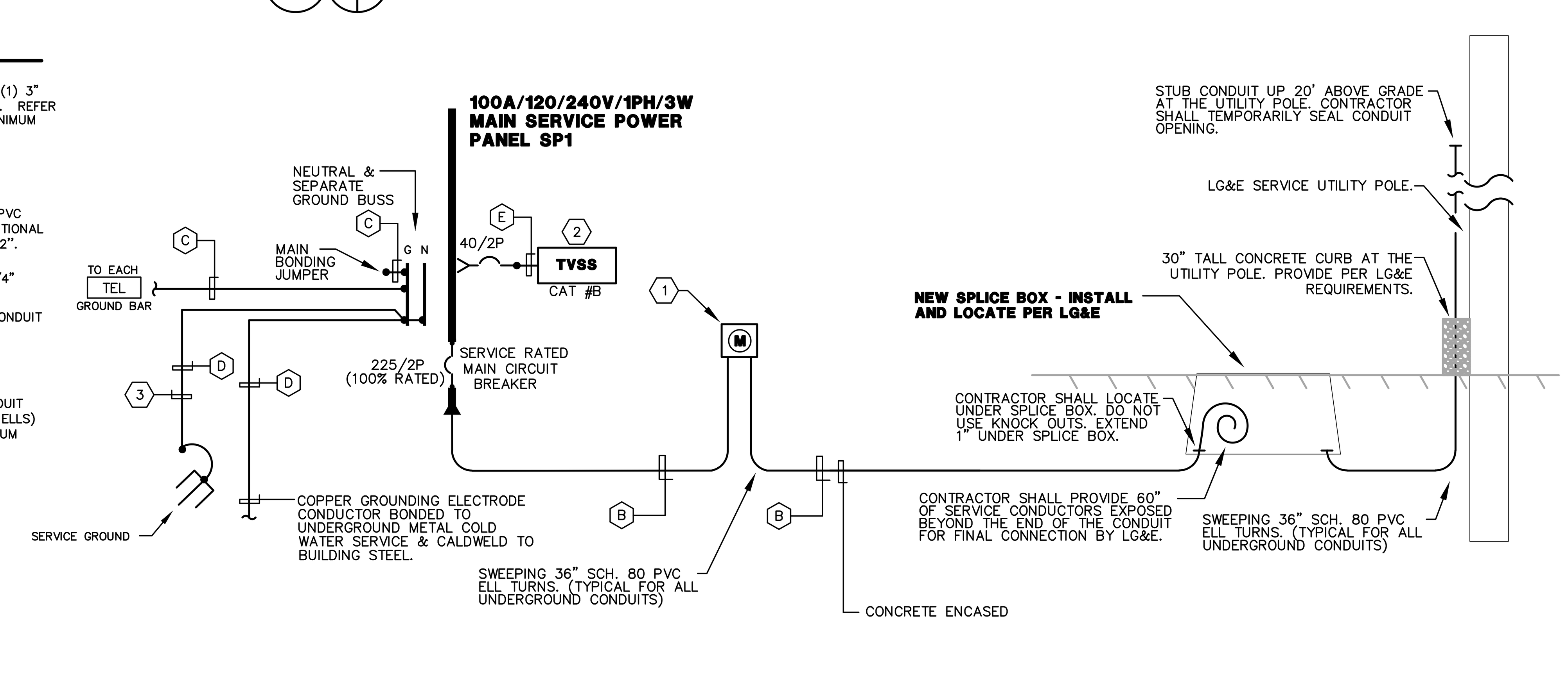

POWER DISTRIBUTION RISER DIAGRAM

NO SCALE

3 / E1-101

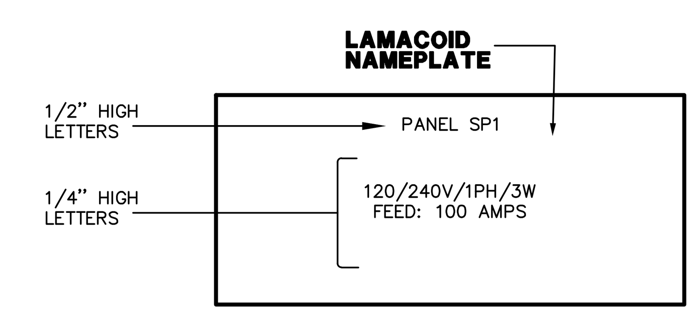

TYPICAL POWER PANEL NAMEPLATE DETAIL

NO SCALE

LABELS SHALL BE BLACK WITH WHITE LETTERS.
UTILIZE SCREW-ON TYPE LAMACOID PLATE

PANELBOARD SCHEDULE NOTES :

*	REFER TO POWER RISER FOR SIZES BE LABELLED AS SPARES IF THE PROJECT ALTERNATES ARE NOT
GFI	PROVIDE G.F.C.I. TYPE CIRCUIT BREAKER
NOTES:	CIRCUIT BREAKERS FOR "ALTERNATE" WORK SHALL REMAIN AND ACCEPTED. ALL NEW PANELBOARDS SCHEDULED ON THIS SHEET SHALL BE ORDERED WITH "DOOR-IN-DOOR" OPTION.

STATE OF KENTUCKY
BRIAN K. BAUMGARTLE
23119
PROFESSIONAL ENGINEER

Architecture
Engineering
Planning

MEP ENGINEERING CONSULTANTS

Architect
BRAVURA
111 West Washington Street
Louisville, Kentucky 40202
T: (502) 584-9900
F: (502) 584-0829

The Parklands of Floyds Fork, Project 4A
The Strand, Turkey Run Park and Broad Run Park
Louisville, Kentucky

Owner:
21st Century Parks, Inc.
371 W. Main St., Suite 202
Louisville, Kentucky 40202

REV #	DATE	DESCRIPTION
	05/08/2013	ISSUED FOR BID
1	05/23/2013	ADDENDUM #1: REVISED TITLE TO READ, "ADD-ALT. NO.2"

Job No: 155-617
Date: May 23, 2013
Scale: As Shown
Drawn By:
ISSUED FOR ADDENDUM #1

Drawing Title:
Parklands of Floyds Fork
ADD-ALT NO. 2
PROJECT 4A
The Strand
2-Hole Trailhead
Plans - Electrical

Drawing No:
E1-101

GENERAL NOTES (APPLICABLE TO ALL WORK AND DOCUMENTS) :

1. EACH CONTRACTOR, PROPOSER, SUPPLIER AND/OR MANUFACTURER SHALL REFER TO ALL DOCUMENTS PERTAINING TO THIS PROJECT AND COORDINATE ACCORDINGLY SO AS TO INSURE ADEQUACY OF FIT, COMPLIANCE WITH SPECIFICATIONS, PROPER VOLTAGE AND CURRENT CHARACTERISTICS TO AVOID CONFLICT WITH ANY OTHER BUILDINGS SYSTEMS. VERIFY SAME WITH SHOP DRAWINGS.
2. ALL OFFSETS, TURNS, FITTINGS, TRIM, DETAIL, ETC. MAY NOT BE INDICATED, BUT SHALL BE PROVIDED AS REQUIRED. ADDITIONAL ALLOWANCES SHALL BE INCLUDED FOR SAME AT EACH PROPOSERS DISCRETION.
3. INSTALL NO PIPING, CONDUIT, DUCTWORK, ETC. IN A LOCATION OR IN A MANNER WHICH WILL ALLOW FREEZING AND THE COLLECTION OF CONDENSATION THEREON. IF IN DOUBT, CONTACT THE ENGINEERS.
4. ADVISE THE ENGINEERS OF ANY CONFLICTS, ERRORS, OMISSIONS, ETC. AT LEAST TEN DAYS PRIOR TO BID DATE, TO ALLOW CLARIFICATION BY WRITTEN ADDENDUM.
5. DEVIATION FROM SPECIFICATIONS OR PLANS REQUIRES PRIOR WRITTEN APPROVAL FROM THE ENGINEERS AND MUST BE SUBMITTED IN WRITING NO LATER THAN TEN DAYS PRIOR TO THE BID DATE. (SEE ALSO NOTE 20).
6. OBSERVE ALL APPLICABLE CODES, RULES AND REGULATIONS THAT MAY APPLY TO THE WORK UNDER THIS CONTRACT. (CITY, COUNTY, LOCAL, STATE, FEDERAL, MUNICIPALITY, UTILITY COMPANY, OSHA, ETC.)
7. INSTALL EQUIPMENT, MATERIALS, ETC. IN STRICT ACCORD WITH MANUFACTURERS' RECOMMENDATIONS AND DIRECTIONS. IF IN CONFLICT WITH THE DESIGN INDICATED IN CONTRACT DOCUMENTS, ADVISE THE ENGINEERS PRIOR TO INSTALLATION FOR CLARIFICATION.
8. DO NOT RECESS PANELBOARD TUBS OR OTHER FLUSH-MOUNTED EQUIPMENT IN WALLS THAT HAVE A FIRE RATING, AS REQUIRED BY CODES. NO INSTALLATION SHALL DIMINISH OR VOID FIRE RESISTIVE RATINGS IN ANYWAY.
9. THE PURPOSE AND INTENT OF ALL OF THE DOCUMENTS PERTAINING TO THIS PROJECT IS TO PROVIDE A COMPLETE, FUNCTIONAL, SAFE, LIKE NEW FACILITY. ANYTHING LESS SHALL BE UNACCEPTABLE.
10. ALL SYSTEMS, EQUIPMENT AND MATERIALS ARE TO BE INSTALLED IN A NEAT AND WORKMANLIKE MANNER. WORK NOT MEETING THIS CRITERION SHALL BE REMOVED AND REINSTALLED SATISFACTORILY. FINAL DETERMINATION OF THE ACCEPTABILITY OF THE QUALITY OF WORK RESIDES WITH THE ENGINEER.
11. ALL WORK, MATERIALS, EQUIPMENT, ETC. SHALL BE FULLY GUARANTEED FOR ONE FULL CALENDAR YEAR FROM THE DATE OF SUBSTANTIAL COMPLETION AS DOCUMENTED BY THE ENGINEERS, UNLESS LONGER WARRANTY PERIODS FOR EQUIPMENT ARE SPECIFIED.
12. UNLESS OTHERWISE SPECIFIED OR INDICATED, ALL EQUIPMENT AND/OR MATERIALS WITHIN OCCUPIED SPACES OR EXPOSED TO VIEW ON THE BUILDING EXTERIOR SHALL BE PRIMED AND FINISHED SO AS TO COMPLEMENT ADJACENT SURFACE, UNLESS OTHERWISE NOTED. COORDINATE WORK WITH ARCHITECT.
13. WHERE PENETRATING NEW ROOFING MEMBRANE OR OTHER MATERIALS USED FOR WEATHERPROOFING THE BUILDING, MAKE SUCH PENETRATION IN A WAY THAT WILL NOT VOID OR DIMINISH THE ROOFING WARRANTY OR INTEGRITY IN ANYWAY. COORDINATE ALL SUCH PENETRATIONS WITH THE ROOFING INSTALLER/ARCHITECT.
14. THE CONTRACTOR IS RESPONSIBLE FOR ALL UTILITY COMPANY FEES, OR OTHER COSTS THAT THE UTILITY COMPANY MAY REQUIRE TO COMPLETE THEIR WORK. (ELECTRIC, TELEPHONE, CABLE TELEVISION, ETC.)
15. COORDINATE WITH ARCHITECTURAL FLOOR PLANS, ELEVATIONS AND CASEWORK DETAILS FOR LOCATION OF RECEPTACLES, UTILITY OUTLETS, ELECTRICAL DEVICES, ETC.
16. UNLESS OTHERWISE SPECIFIED OR INDICATED, INSTALL LIGHT FIXTURES, SMOKE DETECTORS, SPEAKERS AND OTHER CEILING MOUNTED APPURTENANCES IN THE CEILING IN A SYMMETRICAL PATTERN, UNLESS SPECIFICALLY INDICATED OTHERWISE.
17. ANY VIBRATING, OSCILLATING OR OTHER NOISE OR MOTION PRODUCING EQUIPMENT SHALL BE ISOLATED FROM SURROUNDING SYSTEMS IN AN APPROVED MANNER. NOISY OR STRUCTURALLY DAMAGING INSTALLATIONS SHALL BE SATISFACTORILY REPLACED OR REPAIRED AT THE INSTALLING CONTRACTORS' EXPENSE. THE FINAL DECISION ON THE SUITABILITY OF A PARTICULAR INSTALLATION'S ACCEPTABILITY SHALL BE THAT OF THE ENGINEER.
18. ALL WORK SHALL BE CONCEALED UNLESS SPECIFICALLY INDICATED TO BE EXPOSED, OR REQUIRED TO BE EXPOSED. IF IN DOUBT, CONTACT THE ENGINEERS FOR CLARIFICATION PRIOR TO INSTALLING ANY SUCH WORK.
19. PROVIDE DETAILED SHOP DRAWINGS TO ENGINEERS PRIOR TO PURCHASING AND INSTALLING ANY EQUIPMENT.
20. DEVIATIONS IN SIZES, CAPACITIES, FIT, FINISH, ETC. FOR EQUIPMENT FROM THAT PRIME SPECIFIED SHALL BE THE RESPONSIBILITY OF THE PURCHASER OF THAT EQUIPMENT. ANY PROVISIONS REQUIRED TO ACCOMMODATE A DEVIATION, WHETHER APPROVED BY THE ENGINEERS OR NOT, SHALL BE THE RESPONSIBILITY OF THE PURCHASER.
21. THE CONSTRUCTION MANAGER, GENERAL CONTRACTOR, OR WHOMEVER HOLDS THE PRIME CONTRACT(S) FOR THIS CONSTRUCTION IS RESPONSIBLE FOR THE COORDINATION, APPEARANCE, SCHEDULING AND TIMELINESS OF THE WORK OF ALL TRADES, CONTRACTORS, SUPPLIERS, INSTALLERS, ETC.. POOR OR UNTIMELY WORK ON THE PART OF ANY SUBCONTRACTOR SHALL BE RESOLVED BY THE PARTY WHO ENGAGED THEM ON THIS PROJECT.
22. WHERE MOUNTING HEIGHTS ARE NOT INDICATED OR ARE IN CONFLICT WITH ANY OTHER BUILDING SYSTEM, CONTACT THE ENGINEERS BEFORE AFFECTING INSTALLATION. REFER ALSO TO ARCHITECTURAL WALL INTERIOR AND EXTERIOR WALL ELEVATIONS, CEILING HEIGHTS AND OTHER DETAILS OF THESE DOCUMENTS, AS APPLICABLE.
23. WHERE FIRE RATED CEILING ASSEMBLIES ARE NOTED , PROVIDE RATED , APPROVED GYPSUM BOARD ENCLOSURES ABOVE LIGHT FIXTURES , CEILING DEVICES , ETC. IN OR ON CEILING , TO MAINTAIN CEILING RATINGS .
24. COORDINATE THE LOCATION OF DRAINS, ELECTRICAL OUTLETS, ETC. WITH ALL CASEWORK, KITCHEN EQUIPMENT, MECHANICAL ROOM EQUIPMENT, ETC. PRIOR TO COMMENCING INSTALLATION. WORK NOT SO COORDINATED SHALL BE REMOVED AND PROPERLY INSTALLED AT THE EXPENSE OF THE RESPONSIBLE CONTRACTOR(S).
25. ALL ELECTRICAL COMPONENTS OR EQUIPMENT SHALL BE LABELED BY UNDERWRITER'S LABORATORIES OR OTHER APPROVED LISTING AGENCY. APPROVED AND LABELING OF INDIVIDUAL COMPONENTS ON AN ASSEMBLY IS NOT ACCEPTABLE AS MEETING THIS REQUIREMENT, UNLESS WAIVED BY THE ENGINEER IN WRITING.
26. ALL WIRING SYSTEMS SHALL BE INSTALLED WITH A MINIMUM OF SPLICES. CONDUCTORS, WHETHER SINGLE OR MULTI-PAIR SHALL BE INSTALLED CONTINUOUS INSOFAR AS POSSIBLE FROM TERMINAL POINT TO TERMINAL POINT.
27. ALL CONTRACTORS SHALL EXERCISE EXTREME CARE IN THE COURSE OF THEIR WORK SO AS TO INSURE THAT THEY DO NOT INTERRUPT ANY EXISTING SERVICE OR SUB-SERVICE FOR SAFETY PURPOSES, PAY PARTICULAR ATTENTION TO THIS PRECAUTION RELATIVE TO NATURAL GAS AND ELECTRICAL LINES. VERIFY THE LOCATION, SIZE, TYPE, ETC. OF EACH UNDERGROUND OR OVERHEAD UTILITY. ALL WORK SHALL BE PERFORMED IN ACCORD WITH ALL FEDERAL, STATE AND/OR LOCAL RULES, REGULATIONS, STANDARD AND SAFETY REQUIREMENTS. UTILITIES SHALL BE INSTALLED IN ACCORD WITH THE APPLICABLE MUNICIPALITY OR UTILITY COMPANY STANDARDS. IN ALL CASES, THE MOST STRINGENT REQUIREMENT SHALL APPLY.
28. ALL SUPPORTS FOR EQUIPMENT, DEVICES OR FIXTURES SHALL BE UNIQUE, FROM THE BUILDING STRUCTURE. DO NOT SUPPORT WORK FROM OTHER TRADES, EQUIPMENT OR SUPPORTS WITHOUT WRITTEN PERMISSION FROM THE ENGINEER AND CONSENT OF THE OTHER TRADE, IN WRITING. SUPPORTING FROM CROSS BRACING OR ROOF DECK WILL NOT BE ALLOWED.
29. WHERE INTERRUPTING AN EXISTING UTILITY OR SERVICE DELIBERATELY OR ACCIDENTALLY, THE RESPONSIBLE CONTRACTOR SHALL WORK CONTINUOUSLY AS NEEDED TO RESTORE SAME, PROVIDING PREMIUM TIME AS NEEDED.
30. REFER TO ARCHITECTURAL WALL ELEVATIONS (WHERE GIVEN) FOR HEIGHTS AND MOUNTING RELATIONSHIP OF OUTLETS AND EQUIPMENT. IF IN DOUBT, CONTACT THE ENGINEER FOR DIRECTION PRIOR TO INSTALLING WORK.
31. AS APPLICABLE, REFER TO ARCHITECTURAL PHASING PLANS AND PHASING BOUNDARIES ON THESE DRAWINGS FOR SEQUENCING OF WORK, FULL EXTENT OF AREAS INVOLVED, EXTENT OF CEILING WORK, ETC. PROVIDE TEMPORARY CONNECTIONS FOR CIRCUITS AND WORK AS REQUIRED TO MAINTAIN SEQUENCE OF THE WORK FROM PHASE TO PHASE.
32. CONTRACTOR SHALL FIRESAFE AND SEAL ALL PENETRATIONS THROUGH FIRE RATED ASSEMBLIES AS REQUIRED TO MAINTAIN AND ACHIEVE SPECIFIED RATING. ALL WORK SHALL BE PERFORMED IN ACCORDANCE WITH KBC 2007 REQUIREMENTS.
33. THIS CONTRACTOR SHALL BE RESPONSIBLE FOR ALL CUTTING AND PATCHING REQUIRED FOR HIS WORK. ALL CUTTING AND PATCHING SHALL BE IN ACCORD WITH THE ARCHITECT'S STANDARDS FOR SUCH WORK. ALL WORK SHALL BE CONCEALED UNLESS SPECIFICALLY INDICATED TO BE EXPOSED, OR REQUIRED TO BE EXPOSED. IF IN DOUBT, CONTACT THE ENGINEERS FOR CLARIFICATIONS PRIOR TO INSTALLING ANY SUCH WORK.
34. INTERRUPTION OF ANY EXISTING SERVICES SHALL BE COORDINATED WITH THE GENERAL CONTRACTOR, UTILITY COMPANY AS NECESSARY, AND THE ARCHITECT, AT LEAST ONE WEEK IN ADVANCE OF ANTICIPATED INTERRUPTION. A SCHEDULE FOR THESE OUTAGES SHALL BE DEVELOPED AND AGREED UPON BETWEEN THE PARTIES MENTIONED, TO AVOID UNNECESSARY INCONVENIENCE TO THE OWNER OR ANY AFFECTED PARTY. NOTIFY THE UTILITY COMPANY OF ANY ANTICIPATED SERVICES REQUIRED TWO WEEKS IN ADVANCE, IN WRITING. IF UTILITY COMPANY REQUIRES A LONGER NOTIFICATION PERIOD, SO PROVIDE.
35. LOCATE CHAIN-HUNG INDUSTRIAL FIXTURES IN MECHANICAL ROOMS TO AVOID DUCTWORK AND PIPING, TO MAXIMIZE AVAILABLE LIGHT. SPACE AROUND EQUIPMENT, AIR HANDLERS, ETC. TO PROVIDE ADEQUATE LIGHTING TO ALL AREAS OF ROOM. PROVIDE ADDITIONAL FIXTURES OF SAME TYPE AS NEEDED TO FULFILL THIS REQUIREMENT.
36. WHERE EXIT SIGNS OR EMERGENCY BATTERY PACKS ARE PROVIDED, THEY SHALL BE CONNECTED TO AN UNSWITCHED LINE.
37. ALL LIGHTING FIXTURE LENSES, PARABOLIC LOUVERS, DOWNLIGHTING ALZAK CONES AND "PARACUBE" LOUVERS SHALL BE HANDLED WITH COTTON GLOVES DURING INSTALLATION AND LAMPING TO AVOID FINGERPRINTS OR DIRT DEPOSITS. IT IS PREFERRED THAT FIXTURES BE SHIPPED AND INSTALLED WITH CLEAR PLASTIC BAGS TO PROTECT LOUVERS. AT CLOSE OF PROJECT, AND AFTER CONSTRUCTION AIR FILTERS ARE CHANGED, REMOVE BAGS. ANY LOUVER OR CONE SHOWING DIRT OR FINGER PRINTS SHALL BE CLEANED WITH SOLVENT RECOMMENDED BY THE MANUFACTURER, OR REPLACED AS NECESSARY IN ORDER TO TURN OVER TO THE OWNER NEW FIXTURES AT OCCUPANCY.
38. ALL MATERIALS FURNISHED AND ALL WORK INSTALLED SHALL COMPLY WITH THE CURRENT EDITION OF THE NATIONAL ELECTRICAL CODES, NATIONAL FIRE CODES OF THE NATIONAL FIRE PROTECTION ASSOCIATION, THE REQUIREMENTS OF LOCAL UTILITY COMPANIES, AND WITH THE REQUIREMENTS OF ALL GOVERNMENTAL AGENCIES OR DEPARTMENTS HAVING JURISDICTION. IF ANY CONFLICTS OR DISCREPANCIES OCCUR THE MOST STRINGENT SHALL APPLY.
39. DO NOT SCALE FROM DRAWINGS, AS PRINTING DISTORTS SCALE. WORK SHALL BE LAID OUT FROM DIMENSIONED DRAWINGS, OR DIMENSIONS SUPPLIED TO THE CONTRACTOR.

LIGHT FIXTURE SCHEDULE:

TYPE	DESCRIPTION	MODEL	LAMPS	REMARKS	VOLTAGE
A	PENDANT MOUNTED, EXTERIOR COMPACT FLUORESCENT FIXTURE WITH DIE-CAST ALUMINUM HOUSING AND GUARD, HEAT AND SHOCK RESISTANT PRISMATIC GLASS GLOBE AND NEOPRENE GASKETING.	LUMINIS #SR200S(CF)/F226/120V/BKT/SW45/STC/FS	(2) 26W Gx24q 4100K	PROVIDE WITH CLEAR PRISMATIC GLASS GLOBE AND DIE CAST ALUMINUM GUARD (CAGE). FINISH SHALL BE JET BLACK POLYESTER POWDER COAT. PROVIDE CUSTOM CUT PENDANT LENGTH FOR MOUNTING HEIGHT OF 9'-0" AFF TO BOTTOM OF FIXTURE.	120V
B	LINEAR FLUORESCENT, WET LOCATION LISTED FIXTURE WITH FIBERGLASS HOUSING SUSPENDED BY AIRCRAFT CABLE (GRIPPLE)	LITHONIA #DMW232120/STSL/GLR	(2) "SUPER" F32T8/841	PROVIDE ELECTRONIC, PROGRAMMED START, 1-LAMP BALLAST WITH LESS THAN 10% THD, BALLAST FACTOR (BF) OF 0.88.	120V
C	WALL MOUNTED, EXTERIOR COMPACT FLUORESCENT FIXTURE WITH DIE-CAST ALUMINUM HOUSING AND GUARD, HEAT AND SHOCK RESISTANT PRISMATIC GLASS GLOBE AND NEOPRENE GASKETING.	LUMINIS #SR540FH(CF)/F226/120V/BKT/CV/FS	(2) 26W Gx24q 4100K	PROVIDE WITH CLEAR PRISMATIC GLASS GLOBE AND DIE CAST ALUMINUM GUARD (CAGE). FINISH SHALL BE JET BLACK POLYESTER POWDER COAT.	120V
E	2-HEAD BATTERY BACK-UP FIXTURE WITH OUTPUT FOR 90 MINUTES.	LITHONIA #ELM	N/A	HOUSING WITH UNIT MOUNTED TEST SWITCH AND INDICATOR LIGHTS.	120V
F	REMOTE EMERGENCY SURFACE MOUNTED LIGHTING POWER INVERTER.	HIGHLITES #PCF-250 CARPENTER EQUAL	N/A	HOUSING WITH UNIT MOUNTED TEST SWITCH AND INDICATOR LIGHTS.	120V
G	WALL MOUNTED, COMPACT FLUORESCENT FIXTURE WITH DIE-CAST ALUMINUM HOUSING AND GUARD, HEAT AND SHOCK RESISTANT PRISMATIC GLASS GLOBE AND NEOPRENE GASKETING.	LUMINIS #SR500(CF)/F126/120V/BKT/FS	(1) 26W Gx24q 4100K	PROVIDE WITH CLEAR PRISMATIC GLASS GLOBE AND DIE CAST ALUMINUM GUARD (CAGE). FINISH SHALL BE JET BLACK POLYESTER POWDER COAT.	120V
OL1	1-HEAD WALL MOUNT LED FLOOD LIGHT FIXTURE WITH TIGHT SPOT DISTRIBUTION.	CREE #FLDEDG15AA 16DULWH 525 40K LITHONIA EQUAL LIGHTOLIER EQUAL	LED 23000 LUMENS 4000K	MAXIMUM INPUT OF 265 WATTS.	120V

LIGHT FIXTURE SCHEDULE GENERAL NOTES :

- ALL LIGHT FIXTURES SHALL BE UL LISTED.
- ALL BIDDERS, INCLUDING THOSE SPECIFIED AND MANUFACTURERS LISTED AS "EQUAL", SHALL SUBMIT PRODUCT CUTSHEETS TO THE ENGINEER TEN (10) DAYS PRIOR TO BID FOR FINAL WRITTEN APPROVAL. "EQUAL" FIXTURES SHALL BE OF EQUAL OR BETTER QUALITY AND PERFORMANCE TO THE SPECIFIED FIXTURE. BURDEN OF PROOF SHALL BE ON THE MANUFACTURER.
- MANUFACTURERS/VENDORS WISHING TO BID SUBSTITUTE FIXTURES OTHER THAN THOSE LISTED ON THE LIGHT FIXTURE SCHEDULE, SHALL SUBMIT CUTSHEETS AS REQUIRED PER SPECIFICATION SECTION 16500 AND AT THE REQUEST OF THE ENGINEER PROVIDE FACTORY POINT-BY-POINT CALCULATIONS USING AGI32 AND PROVIDE ELECTRONIC .AGI FILE TEN (10) DAYS PRIOR TO BID FOR WRITTEN APPROVAL. BURDEN OF PROOF SHALL BE ON THE MANUFACTURER.
- ALL FLUORESCENT, COMPACT FLUORESCENT AND CERAMIC METAL HALIDE LAMPS SHALL HAVE A CRI GREATER THAN 80. ALL LAMPS OF A GIVEN TYPE (LINEAR FLUORESCENT, COMPACT FLUORESCENT, CERAMIC METAL HALIDE, HALOGEN, ETC.) SHALL BE FROM THE SAME MANUFACTURER. ANY DISCOLORED LAMPS SHALL BE REPLACED WITH NEW UNTIL SATISFACTORY COLOR IS ACHIEVED. ALL F54T5HO LAMPS SHALL HAVE AN INITIAL LUMEN PACKAGE OF 5000 OR GREATER AND RATED AVERAGE LIFE OF 20,000 HOURS. ALL F32T8 LAMPS SHALL BE "SUPER T8" WITH 3100 MINIMUM INITIAL LUMENS, 3000 MINIMUM DESIGN LUMENS AND RATED AVERAGE LIFE OF 36,000 HOURS.
- CONTRACTOR SHALL PROVIDE UNSWITCHED CONDUCTORS TO ALL EMERGENCY LIGHTS, NIGHT LIGHTS, ETC. AS REQUIRED.
- PROVIDE BALLASTS FOR FIXTURE LAMP SWITCHING AS INDICATED ON LIGHTING FLOOR PLANS.
- CONTRACTOR SHALL FOCUS, AIM AND ADJUST LIGHT FIXTURES UNDER THE SUPERVISION AND DIRECTION OF THE ENGINEER AND ARCHITECT. ALLOW LABOR FOR FINAL FOCUS AND ADJUSTMENTS AFTER DARK. LIFTS AND SCAFFOLDING SHALL BE AVAILABLE.
- CONFIRM ALL FINISHES AND MOUNTING HEIGHTS WITH ARCHITECT DURING SHOP DRAWING REVIEW. PROVIDE CUSTOM, FACTORY CUT STEM LENGTHS AS REQUIRED.
- EXTERIOR FLUORESCENT FIXTURES SHALL BE PROVIDED WITH 0° BALLASTS.
- CONTRACTOR SHALL VERIFY CEILING TYPES PRIOR TO ORDERING FIXTURE AND PROVIDE FIXTURES APPROPRIATE TO THE ACTUAL CONDITION. THIS IS TO INCLUDE SPECIFIC TYPE OF LAY-IN CEILING GRID.
- ALL FIXTURES WITH BALLASTS AND LOW-VOLTAGE TRANSFORMERS INCLUDING FLUORESCENT, COMPACT FLUORESCENT AND CERAMIC METAL HALIDE TYPES SHALL HAVE INTERNAL FAST-BLOW FUSING.
- BALLASTS SHALL BE MANUFACTURED BY ADVANCED, SYLVANIA OR GE AND SHALL BE COMPATIBLE AND TESTED WITH LAMP(S). IF LAMP AND BALLAST COMBINATION HAS A SIGNIFICANT AMOUNT OF FAILURE DUE TO LAMP AND BALLAST COMBINATION, THE CONTRACTOR SHALL REPLACE ALL OF THE LAMPS AND BALLASTS HAVING THE FAILURE IN WHOLE.
- ALL LIGHT FIXTURES, INCLUDING PENDANTS AND DOWNLIGHTS, SHALL HAVE A "MAXIMUM WATTAGE LABEL" AFFIXED TO EACH FIXTURE BY THE MANUFACTURERS FACTORY. MAXIMUM WATTAGE TO BE BASED ON THE SPECIFIED LAMP(S) FROM THE LIGHT FIXTURE SCHEDULE.
- LINEAR FLUORESCENT AND COMPACT FLUORESCENT LIGHT FIXTURES SHALL BE PROVIDED WITH ONE OF THE FOLLOWING LAMP AND BALLAST COMBINATIONS:
  1. SYLVANIA LAMP(S)/SYLVANIA BALLAST(S)
  2. PHILIPS LAMP(S)/ADVANCE BALLAST(S)
  3. GE LAMP(S)/GE BALLAST(S)

  LAMP AND BALLAST COMBINATIONS SHALL HAVE AN UNCONDITIONAL 5 YEAR COMBINATION LAMP AND BALLAST SYSTEM WARRANTY.
- SPARE LAMPS: CONTRACTOR SHALL FURNISH TO THE OWNER AT COMPLETION 10% OF EACH LAMP TYPE WITH A MINIMUM OF 5 OF EACH LAMP TYPE.
- SPARE BALLASTS: CONTRACTOR SHALL FURNISH TO THE OWNER AT COMPLETION 2% OF EACH FLUORESCENT BALLAST WITH A MINIMUM OF 1 OF EACH TYPE.

BACKBOX SCHEDULE :

INDICATING NO.	SIZE REQUIRED
1G	4-11/16" SQUARE x 2-1/8"D TWO-GANG BACKBOX (STEEL CITY #72171) WITH SINGLE-GANG 3/4" RAISED EXTENSION RING. (STEEL CITY #72-C-14)
2G	4-11/16" SQUARE x 2-1/8"D TWO-GANG BACKBOX (STEEL CITY #72171) WITH TWO-GANG 3/4" RAISED EXTENSION RING. (STEEL CITY #72-C-18)
2G-A	6-3/16"W x 4-1/2"H x 2-1/2"D TWO-GANG BACKBOX (STEEL CITY #H2BD) WITH TWO-GANG 3/4" RAISED EXTENSION RING AS REQUIRED.
3G	8-5/8"W x 4-1/2"H x 2-1/2"D THREE-GANG BOX (STEEL CITY #H3BD) WITH THREE-GANG 3/4" RAISED EXTENSION RING AS REQUIRED.

GENERAL NOTE:

THIS CONTRACTOR MUST REFER TO DIVISION 1 SPECIFICATIONS FOR ALLOWANCES AND ALTERNATES THAT MUST BE INCLUDED BY THIS CONTRACTOR.

SYSTEM	ITEM	DEVICE MODEL # REFER TO SPECS. IF NONE LISTED	BACKBOX, COVER IF APPLICABLE	MOUNTING HEIGHT (TO BOTTOM OF BOX)	DRAWING SYMBOL
SWITCHES	LIGHT SWITCH: GENERAL PURPOSE			44"	
	PROGRAMMABLE TIMED LIGHT SWITCH SENSOR SWITCH PTS 702 OR EQUAL			44"	PTS
LIGHTING	PENDANT	SEE SCHEDULE		CEIL.	
	INDUSTRIAL FIXTURE	SEE SCHEDULE		CEIL.	
POWER OUTLETS	DUPLEX			1'-4"	
	DUPLEX (ABOVE COUNTERTOP)			8" ACT.	
	DUPLEX WITH INTEGRAL GROUND FAULT PROTECTION			1'-4"	GFI
	GANG RECEPTACLE IN COMBINATION WITH SWITCH			44"	C/S
	QUADRUPLEX RECEPTACLE			1'-4"	
	JUNCTION BOX				J
	WEATHER RESISTANT DUPLEX - WITH LOCKABLE, WEATHER-PROOF, "WHILE IN USE" TYPE DIE-CAST METAL COVER. (INTERMATIC # WP1010MC, RED DOT #CSMGV OR TAYMAC #MX3200)	125V, 20AMP, GFCI WEATHER RESISTANT DUPLEX: HUBBELL #GFTR20 COOPER #TWRVGF20 LEVITON #W7599TRE		24"	WP
	DUPLEX - SURGE SUPPRESSER TYPE			1'-6"	SP
ABBREVIATIONS	UNLESS OTHERWISE NOTED				UON
	OWNER FURNISHED CONTRACTOR INSTALLED				OFCI
	OWNER FURNISHED OWNER INSTALLED				OFOI
	CONTRACTOR FURNISHED CONTRACTOR INSTALLED				CFCI
	CONTRACTOR FURNISHED OWNER INSTALLED				CFOI
	ABOVE FINISHED FLOOR				AFF
	WEATHER PROOF				WP
MISC.	CONDUIT CONCEALED IN WALLS OR IN ABOVE CEILING: ARROW(S) INDICATE(S) HOME RUN & # OF CIRCUITS: HASHMARKS INDICATE # OF CONDUCTORS				GROUND, NEUTRAL, Ø
	DASHED LINES INDICATED CONDUIT SHALL BE ROUTED UNDERSLAB OR AS OTHERWISE NOTED. (SEE SPECIFICATIONS FOR DETAILS)				
	DISCONNECT SWITCH			5'-0"	
	FLEXIBLE CONDUIT (SEE SPECIFICATIONS FOR TYPES PERMITTED)				
	MOTOR/EQUIPMENT CONNECTION				
	NORMAL PANELBOARD, SURFACE MOUNTED		MINIMUM 8'-0" AFF	76" TO TOP	
	TRANSFORMER			AS NOTED	
	MANUAL MOTOR RATED STARTER SWITCH	SQUARE-D CLASS 2510		AS NOTED	$M
	TAGGED NOTE				
	MECHANICAL EQUIPMENT DESIGNATOR (REFER TO MECHANICAL SCHEDULES)				
	JUNCTION BOX		AS NOTED	AS NOTED	J

ELECTRICAL LEGEND

NO SCALE (1/E1-001)

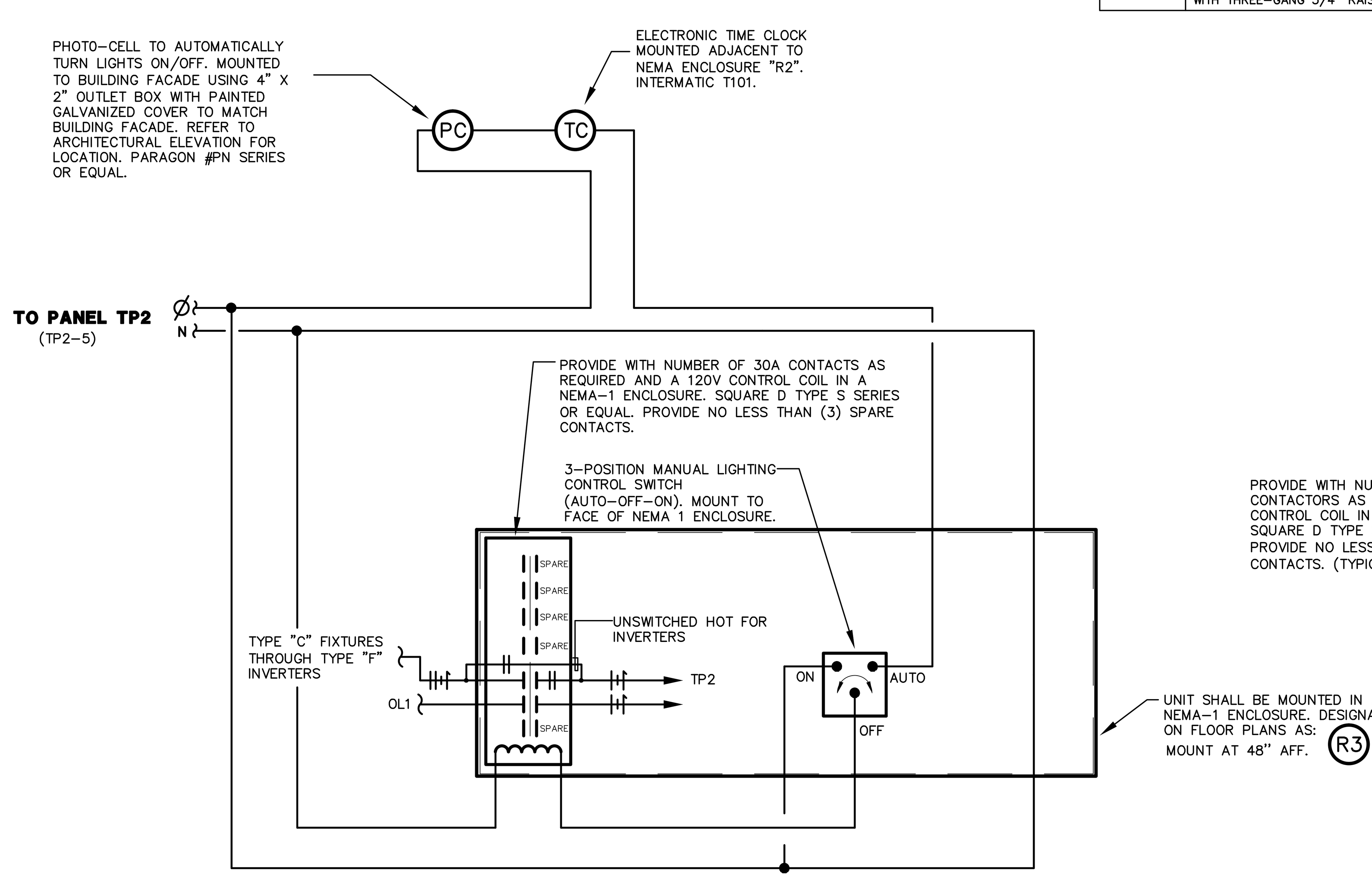

OUTDOOR LIGHTING CONTROL SCHEMATIC

NO SCALE (3/E1-001)

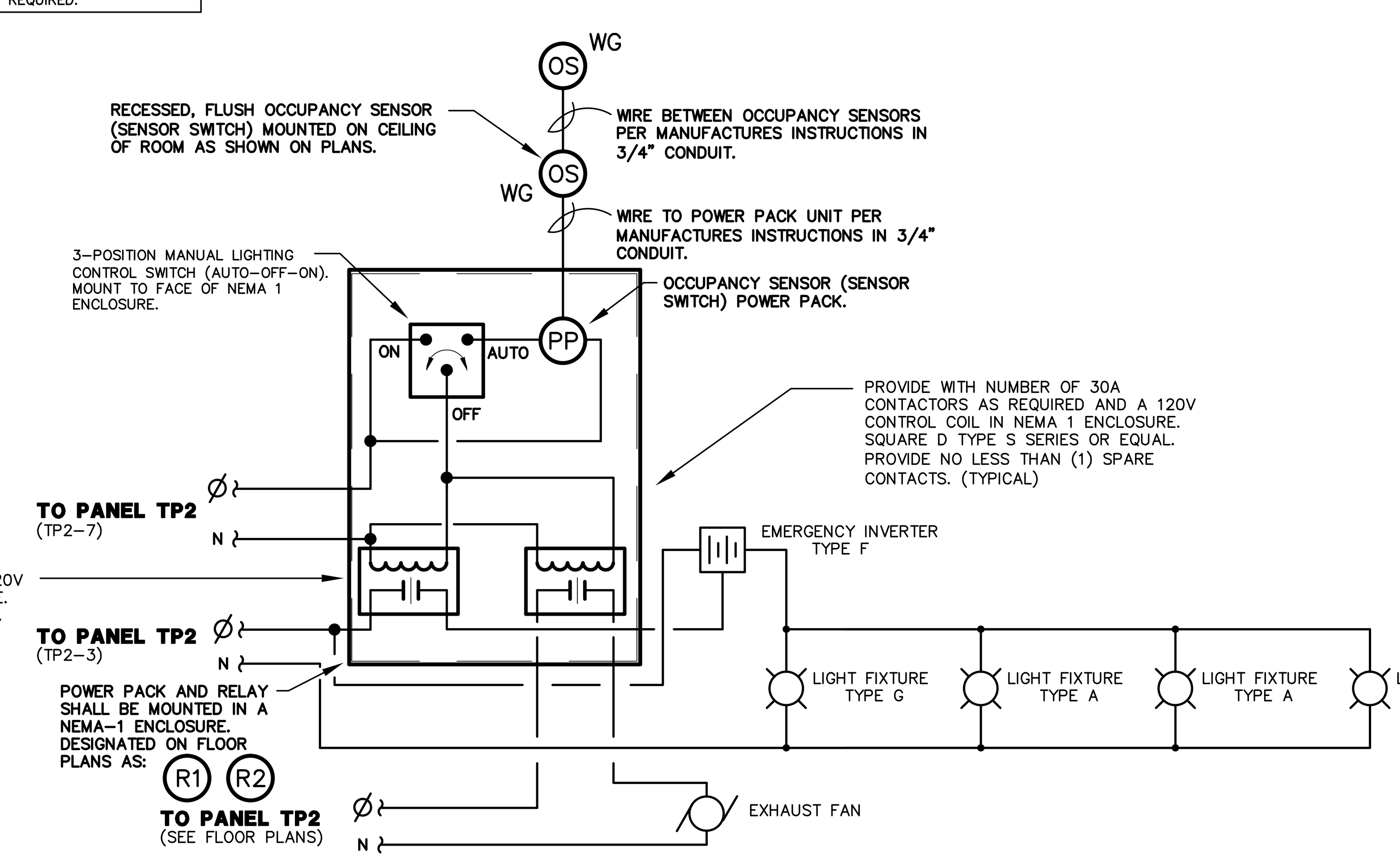

GENERAL NOTES:

VERIFY ALL WIRING REQUIREMENTS WITH MANUFACTURER OF OCCUPANCY SENSOR PRIOR TO ROUGH-IN. THIS DIAGRAM IS MEANT TO BE ILLUSTRATIVE ONLY.

CONTRACTOR SHALL PROVIDE INTERFACE BETWEEN MAKE-UP AIR DAMPERS AND EXHAUST FAN. AIR-DAMPS SHALL OPEN WHEN EXHAUST FAN IS ON AND CLOSE WHEN OFF.

TYPICAL RESTROOM LIGHTING/EXHAUST CONTROL SCHEMATIC

NO SCALE (2/E1-001)

The Parklands of Floyds Fork, Project 4A
The Strand, Turkey Run Park and Broad Run Park
Louisville, Kentucky

REV #	DATE	DESCRIPTION
	05/08/2013	ISSUED FOR BID
1	05/23/2013	ADDENDUM #1: REVISED TITLE TO READ: "ADD-ALT. NO.2"

Job No: 155-617
Date: May 23, 2013
Scale: As Shown
Drawn By:
ISSUED FOR ADDENDUM #1

Drawing Title:
Parklands of Floyds Fork
ADD-ALT NO.2
PROJECT 4A
The Strand
2-Hole Trailhead
Legend & Gen. Notes

Drawing No:
E1-001

KEYNOTES (not all keynotes used this sheet)

1. SAWCUT AND REMOVE EXISTING ASPHALT PAVEMENT TO LIMITS INDICATED ON PLAN. COORDINATE WITH LIMITS OF PROPOSED WORK.
2. REMOVE EXISTING GRAVEL ROAD TO LIMITS INDICATED ON PLAN. COORDINATE WITH LIMITS OF PROPOSED WORK.
3. CLEAR AND GRUB EXISTING VEGETATION TO LIMITS INDICATED ON PLAN. COORDINATE WITH LIMITS OF PROPOSED WORK.
4. REMOVE EXISTING FENCE COMPLETELY. FILL RESULTING HOLES WITH EARTH COMPACTED IN 6" LIFTS UNTIL FLUSH WITH ADJACENT GRADE.
5. EXISTING CONSTRUCTION HAUL ROAD (CONSTRUCTED BY PHASE 3A CONTRACTOR) SHALL BE UTILIZED FOR EXCURSION TRAIL ALIGNMENT.
6. REMOVE EXISTING VEHICULAR GUARD RAIL TO LIMITS SHOW ON PLAN. COORDINATE WITH PROPOSED WORK.
7. REMOVE BARN OR FEATURE IN ITS ENTIRETY, INCLUDING STRUCTURE, FLOORS, FOUNDATIONS, ETC.
8. REMOVE FLOORS, SLABS AND FOUNDATION ONLY. REMOVAL AND SALVAGE BARN OR ABOVE-GROUND STRUCTURES AND STORE IN THE IMMEDIATE ADJACENT TOBACCO BARD.
9. COORDINATE THE REMOVAL OF EXISTING OVERHEAD ELECTRIC FACILITIES WITH ELECTRICAL SITE PLANS "UE" SERIES SHEETS.
10. EXISTING GRAVEL DRIVE TO REMAIN. CONTRACTOR SHALL UTILIZE EXISTING AS BASE FOR NEW LOUISVILLE LOOP – COORDINATE WITH NEW WORK "LT" SERIES SHEETS.
11. INSTALL TREE PROTECTION FENCING (REINFORCED SILT FENCE PER MSD EF-10-02). COORDINATE WITH TREE PRESERVATION NOTES, SHEET G0.12.
12. INSTALL ORANGE CONSTRUCTION FENCING AROUND ARCHEOLOGICAL / GLADECREST / WETLAND AREAS AS SHOWN ON PLAN PRIOR TO ANY WORK IN PROXIMITY.
13. IN LIEU OF A CONSTRUCTION FENCE, CONTRACTOR SHALL DEMARK LIMITS OF DISTURBANCE WITH PINK SURVEY RIBBON TIED TO FOLIAGE AT INTERVALS OFTEN ENOUGH TO ASCERTAIN LIMITS ALONG THE ALIGNMENT TO LIMITS INDICATED ON PLAN. CONTRACTOR SHALL LIMIT DISTURBANCE AND PRESENCE TO THE FORK-SIDE OF THE ALIGNMENT.
14. REMOVE EXISTING WATER LINE TO LIMITS INDICATED ON PLAN. COORDINATE WITH LAYOUT PLANS AND OR UTILITY SHEETS FOR NEW ALIGNMENT INFORMATION. CONTRACTOR SHALL COORDINATE WITH THE LOUISVILLE WATER COMPANY FOR ALL ASPECTS OF THIS WORK.

Seals

STATE OF KENTUCKY ROBERT D. MARTIN 15958 LICENSED PROFESSIONAL ENGINEER
Robert D. Martin 5/8/13

Engineering
Planning
1046 East Chestnut Street, Louisville, Kentucky 40204
Phone: (502) 584-9922 Fax: (502) 584-9911
Kentucky • Indiana • Georgia • Tennessee • Florida

LANDSCAPE ARCHITECT
WRT
Wallace Roberts & Todd, LLC
1700 Market Street
28th Floor
Philadelphia, PA 19103
tel 215.732.5215
fax 215.732.2551

Architect
BRAVURA
111 West Washington Street
Louisville, Kentucky 40202
T: (502) 584-9900
F: (502) 584-0829

The Parklands of Floyds Fork, Project 4A

The Strand, Turkey Run Park and Broad Run
Louisville, Kentucky

Owner:
21st Century Parks, Inc.
371 W. Main St., Suite 202
Louisville, Kentucky 40202

REV #	DATE	DESCRIPTION
1	05-23-2013	Addendum #1: Archaeological Area Fencing Adjustment

Job No:	12300.4AC
Date:	May 8, 2013
Scale:	1" = 100'
Drawn By:	

BID SET

Drawing Title:

Parklands of Floyds Fork

Cliffside Center PROJECT 4A Demolition and Tree Preservation

Drawing No:

CC-C2.1

May 22, 2013 – 1:42pm
J:\12300.4AC – 21st Century Parks Phase 4A\SITE\Dwgs\Cdoc\12300.4AC-100-DEMOLITION.dwg (CC-C2.1)

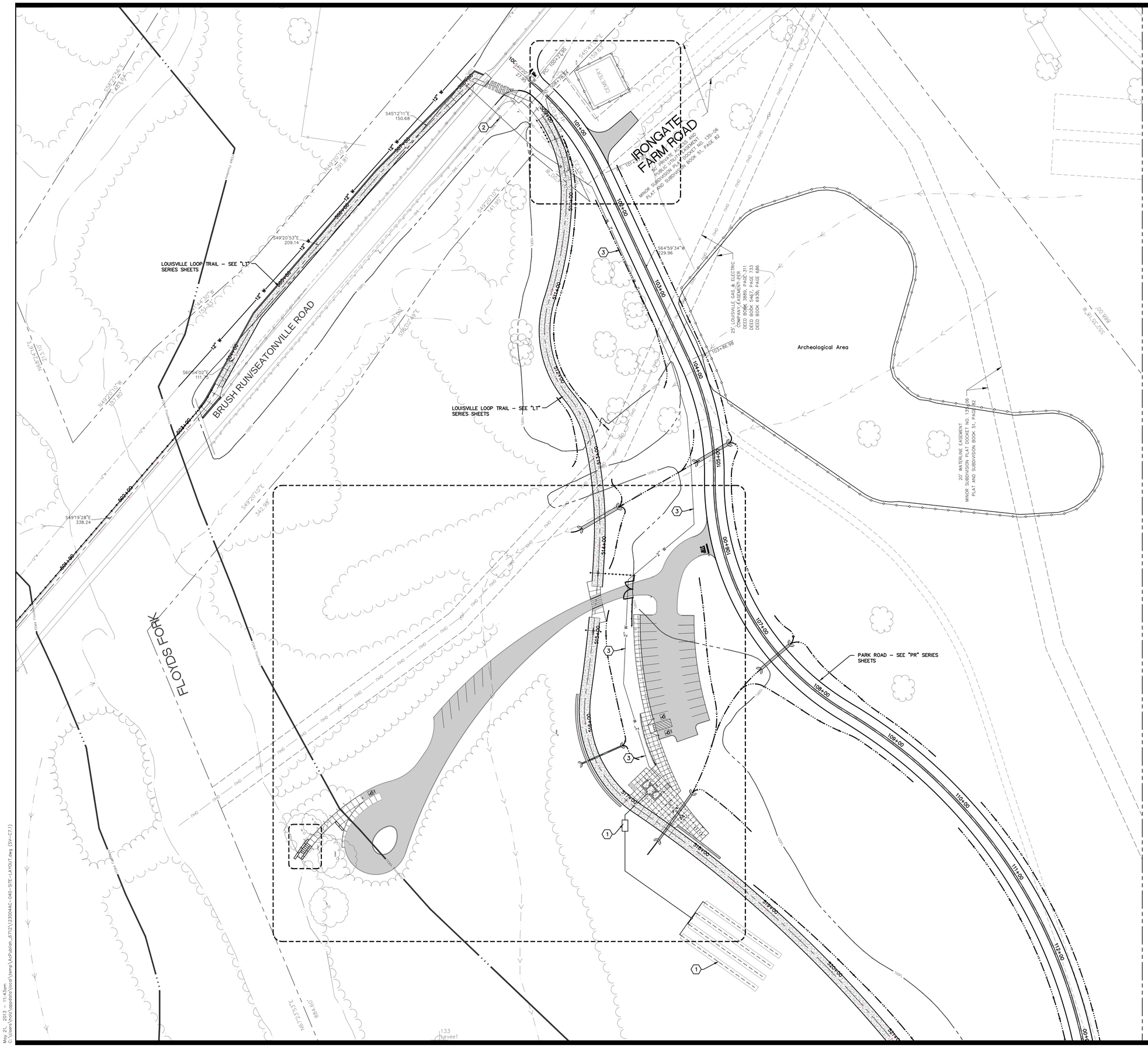

Seals

STATE OF KENTUCKY
ROBERT D. MARTIN
15958
LICENSED
PROFESSIONAL ENGINEER
Robert D. Martin 5/8/13

KEYNOTES (not all keynotes used this sheet)

1. SEPTIC TANK, PUMP TANK AND LATERAL FIELD SHALL ALL BE DESIGNED BY THE CONTRACTOR THROUGH COORDINATION WITH THE METRO HEALTH DEPARTMENT. CONTRACTOR SHALL SUBMIT FINAL DESIGN TO THE OWNER'S ENGINEER FOR APPROVAL PRIOR TO ANY CONSTRUCTION. FOR BIDDING PURPOSES, ASSUME THAT THE SEPTIC SYSTEM SHALL CONSIST OF COMPONENTS, AND SIZE REQUIREMENTS AS OUTLINED IN "SEPTIC SYSTEM SPECIFICATIONS AND NOTES", THIS SHEET.
2. CONTRACTOR SHALL COORDINATE WITH THE LOUISVILLE WATER COMPANY FOR INSTALLATION OF A 2" WATER METER AND PIT (3" METER FOR SILO CENTER ONLY). COORDINATE THE EXACT LOCATION OF WATER METER WITH THE LOUISVILLE WATER COMPANY.
3. CONTRACTOR SHALL INSTALL 2" SCH.40 PVC WATER LINE FROM WATER METER TO LOCATION INDICATED ON PLAN. INSTALL WATER LINE PER DETAIL 3, SHEET 9.2 AND IN ACCORDANCE WITH LOUISVILLE WATER COMPANY STANDARDS AND PLUMBING CODE. CONTRACTOR SHALL WORK WITH OWNER TO FACILITATE THE ORDERING OF NEW WATER SERVICE.
4. EXISTING 12" WATER MAIN SHALL BE RELOCATED AS INDICATED ON PLAN. CONTRACTOR SHALL BE RESPONSIBLE FOR LABOR AND TESTING COSTS ONLY; COST OF LWC DESIGN, MATERIALS AND INSPECTION SHALL BE THE RESPONSIBILITY OF 21CP. INSTALLATION SHALL BE PERFORMED IN ACCORDANCE WITH LOUISVILLE WATER COMPANY STANDARDS.
5. CONTRACTOR SHALL INSTALL 3" SCH.40 PVC WATER LINE WHERE INDICATED ON PLAN. INSTALL WATER LINE PER DETAIL 3, SHEET C9.2 AND IN ACCORDANCE WITH LOUISVILLE WATER COMPANY STANDARDS AND PLUMBING CODE. INSTALL THRUST BLOCKS PER DETAIL 4, SHEET C9.2.
6. CONTRACTOR SHALL INSTALL 2" SCH.40 PVC WATER IRRIGATION SUPPLY LINE TO LIMITS INDICATED ON PLAN. INSTALL PER DETAIL 3, SHEET C9.2 AND IN ACCORDANCE WITH LOUISVILLE WATER COMPANY STANDARDS.
7. CONTRACTOR SHALL INSTALL BALL VALVE, VALVE BOX AND CAP AT PIPE TERMINUS WHERE INDICATED ON PLAN.

GENERAL NOTES

A. ALL CONSTRUCTION RELATING TO WATERLINES SHALL BE INSTALL IN ACCORDANCE WITH LOUISVILLE WATER COMPANY STANDARDS AND APPLICABLE PLUMBING CODE(S).

B. CONTRACTOR SHALL COORDINATE WITH THE LOUISVILLE WATER COMPANY AND EITHER METRO PUBLIC WORKS OR THE KENTUCKY DEPARTMENT OF TRANSPORTATION (AS REQUIRED) FOR REQUIREMENTS AND ALL WORK RELATED TO THE INSTALLATION OF WATER SERVICE LINES REQUIRING THE CROSSING OF EXISTING ROADWAYS.

C. CONTRACTOR SHALL BE RESPONSIBLE FOR PAYING ALL APPLICABLE TAP FEES, METER FEES AND SYSTEM DEVELOPMENT FEES.

D. ALL UNDERGROUND PRESSURE PIPING SHALL HAVE FLEXIBLE JOINTS SUCH AS MECHANICAL JOINTS OR PUSH-ON.

E. ALL BENDS AND TERMINUSES OF UNDERGROUND PRESSURE PIPING SHALL HAVE EITHER RESTRAINED JOINTS OR THRUST BLOCKS.

F. COORDINATE ELECTRICAL SERVICE WITH "E5" SERIES ELECTRICAL PLANS.

SEPTIC SYSTEM SPECIFICATIONS AND NOTES

A. CERTIFIED INSTALLER MUST OBTAIN AN INSTALLATION PERMIT FROM THE METRO HEALTH DEPARTMENT ($405).

B. 2,000 GALLON CAPACITY PRECAST CONCRETE SEPTIC TANK (KENTUCKY STATE APPROVED).

C. RISER AND LID FOR GROUND LEVEL ACCESS ON SEPTIC TANK INLET AND OUTLET ENDS.

D. 2,000 GALLON CAPACITY PRECAST CONCRETE PUMP TANK (KENTUCKY STATE APPROVED).

E. RISER AND LID FOR GROUND LEVEL ACCESS ON PUMP TANK.

F. EFFLUENT PUMP 1/2 HP (115 VOLT INSTALLED ON A DEDICATED 20 AMP BREAKER).

G. HIGH WATER ALARM (SEPERATE LOW VOLTAGE CIRCUIT) LOCATION TO BE DETERMINED BY PROJECT ARCHITECT.

H. BACKFILL AROUND SEPTIC TANK AND PUMP TANK WITH JETTED LIMESTONE SAND TO ENSURE WATER TIGHTNESS.

I. COORDINATE WITH PLUMBING AND ELECTRICAL SHEETS FOR PUMP AND HIGH LEVEL ALARM RELATED INFORMATION.

J. ALL GRAVITY PIPING SHALL BE 4" SCH. 40 PVC.

K. SUPPLY LINE TO HAVE #10 COPPER GROUND WIRE INSTALLED DIRECTLY ABOVE PIPE FOR FUTURE LOCATING PURPOSES.

L. LATERAL FIELD SHALL BE 415 FEET IN LENGTH x 6' WIDE LEACHING CHAMBER BEDS INSTALLED 12 INCHES IN DEPTH WITH 6" OF SETTLED TOPSOIL COVER OVER ENTIRE LATERAL FIELD.

M. INSTALL DISTRIBUTION BOX AS REQUIRED.

N. PROVIDE VERTICAL CLEANOUTS TO FACILITATE SYSTEM MAINTENANCE.

O. AREA OF TANKS AND LATERAL FIELD SHALL BE FINISHED GRADED AFTER SETTLEMENT IN COMPLETE.

P. AREA OF TANKS AND LATERAL FIELD SHALL BE PROTECTED FROM EQUIPMENT, VEHICLES, MATERIAL STORAGE, ETC.

Engineering
Planning
1046 East Chestnut Street, Louisville, Kentucky 40204
Indiana • Kentucky • Ohio • Pennsylvania • Virginia
Kentucky - Indiana - Georgia - Tennessee - Florida

LANDSCAPE ARCHITECT
WRT
Wallace Roberts & Todd, LLC
1700 Market Street
28th Floor
Philadelphia, PA 19103
tel 215.732.5215
fax 215.732.2551

Architect
BRAVURA
111 West Washington Street
Louisville, Kentucky 40202
T: (502) 584-0900
F: (502) 584-0829

The Parklands of Floyds Fork, Project 4A

The Strand, Turkey Run Park and Broad Run
Louisville, Kentucky

Owner:
21st Century Parks, Inc.
371 W. Main St., Suite 202
Louisville, Kentucky 40202

REV #	DATE	DESCRIPTION
1	05-23-2013	Revised septic system specification

Job No:	12300.4AC
Date:	May 8, 2013
Scale:	1" = 40'
Drawn By:	

BID SET

Drawing Title:

Parklands of Floyds Fork

Seaton Valley PROJECT 4A Trail Head and Canoe Launch Utilities

Drawing No:

SV-C7.1

May 21, 2013 – 11:43am
C:\Users\bvoz\Upgraded\bvoz\temp\AcPublish_6732\12300.4AC-040-SITE-LAYOUT.dwg (SV-C7.1)

THE PARKLANDS OF FLOYDS FORK – PROJECT 4A
THE STRAND, TURKEY RUN PARK & BROAD RUN PARK

SECTION 00001

TABLE OF CONTENTS – PROJECT MANUAL AND FRONT END SPECIFICATIONS

DIVISION SECTION TITLE PAGES

MISCELLANEOUS DOCUMENTS
00001- Table of Contents.....00001-1 thru 4
00002- Project Description.....00002-1 thru 2
00003- Site Maps.....00003-1 thru 4

DIVISION 0 – BIDDING REQUIREMENTS
00100- Invitation and Instructions to Bidders.....00100-1 thru 2
00200- General Provisions.....00200-1 thru 3
00400- Evaluation and Bid Form.....00400-1 thru 3
00500- Bonds, Certificates and Administrative Forms.....00500-1 thru 15
00600- Standard Form of Agreement between Owner and Contractor.....00600-1 thru 40
00700- General Conditions.....00700-1 thru 41
00800- Information Available to Bidders.....00800-1 thru 1

DIVISION 01 – GENERAL REQUIREMENTS
011000- Summary.....011000-1 thru 4
012200- Unit Prices.....012200-1 thru 10
012300- Alternates.....012300-1 thru 2
012500- Substitution Procedures.....012500-1 thru 3
012600- Contract Modification Procedures.....012600-1 thru 3
012900- Payment Procedures.....012900-1 thru 5
013100- Project Management and Coordination.....013100-1 thru 8
013200- Construction Progress Documentation.....013200-1 thru 7
013300- Submittal Procedures.....013300-1 thru 10
014000- Quality Requirements.....014000-1 thru 7
~~014110- Special Structural Tests and Special Inspections..... 014110-1 thru 3~~
014200- References.....014200-1 thru 4
015000- Temporary Facilities and Controls.....015000-1 thru 7
016000- Product Requirements.....016000-1 thru 7
017300- Execution.....017300-1 thru 7
017329- Cutting and Patching.....017329-1 thru 4
017419- Construction Waste Management and Disposal.....017419-1 thru 2
017700- Closeout Procedures.....017700-1 thru 5
017823- Operation and Maintenance Data.....017823-1 thru 8
017839- Project Record Documents.....017839-1 thru 3
017900- Demonstration and Training.....017900-1 thru 4

DIVISION 02 – EXISTING CONDTIONS
024119- Selective Demolition.....024119-1 thru 5

DIVISION 03 – CONCRETE

THE PARKLANDS OF FLOYDS FORK – PROJECT 4A
THE STRAND, TURKEY RUN PARK & BROAD RUN PARK

033000- Cast-In-Place Concrete for Buildings and Miscellaneous Structures.....033000-1 thru 11
033001- Cast-In-Place Concrete for Bridge Structures and Slabs.....033001-1 thru 1
033002- Mass Concrete for Bridge Structures.....033002-1 thru 3
033300- Architectural Concrete.....033300-1 thru 11

DIVISION 04 – MASONRY
044200- Exterior Stone Cladding.....044200-1 thru 17
044300- Stone Masonry and Limestone Benches.....044300-1 thru 15
044301- Rock Fence.....044301-1 thru 4
044302- Dry Laid Stone Headwalls and Endwalls.....044302-1 thru 3
047200- Cast Stone..... 047200-1 thru 7

DIVISION 05 – METALS
051200- Structural Steel Framing.....051200-1 thru 1
051201- Structural Strand Cables.....051201-1 thru 4
051202- Wire Rope Mesh Posts.....051202-1 thru 4
051203- Cyclone Mesh.....051203-1 thru 3
051204- Elastomeric Pads.....051204-1 thru 3
055213- Pipe and Tube Railings.....055213-1 thru 7
~~055213- Pipe and Tube Railings-ADD-ALT. NO.2.....055213-1 thru 7~~
057300- Decorative Metal Railings.....057300-1 thru 7

DIVISION 06 - WOOD, PLASTICS, AND COMPOSITES
061063- Exterior Rough Carpentry..... 061063-1 thru 5
061540- Wood Bridge Decking..... 061540-1 thru 3
061600- Sheathing..... 061600-1 thru 4
061801- Glulam Structural Timber Systems..... 061801-1 thru 4
062013- Exterior Finish Carpentry..... 062013-1 thru 6

DIVISION 07 – THERMAL AND MOISTURE PROTECTION
071416- Cold, Fluid-Applied Waterproofing.....071416-1 thru 7
071900- Water Repellents.....076100-1 thru 5
072100- Thermal Insulation.....076100-1 thru 4
076100- Sheet Metal Roofing.....076100-1 thru 14
076200- Sheet Metal Flashing and Trim.....076200-1 thru 7
079200- Joint Sealants.....076200-1 thru 8

DIVISION 08 - OPENINGS
081113- Hollow Metal Doors and Frames.....081113-1 thru 7
085201- Custom-Built Wood Windows.....085201-1 thru 5
087100- Door Hardware.....085201-1 thru 11
088000- Glazing.....085201-1 thru 11

DIVISION 09 - FINISHES
099113- Exterior Painting..... ...099113-1 thru 7
099300- Staining and Transparent Finishing..... ...099300-1 thru 7
099600- High-Performance Coatings..... ...099600-1 thru 5

DIVISION 10 – SPECIALTIES
101426- Exterior Signage.....101426-1 thru 4
102800- Toilet Accessories.....102800-1 thru 5

THE PARKLANDS OF FLOYDS FORK – PROJECT 4A
THE STRAND, TURKEY RUN PARK & BROAD RUN PARK

V. STIPULATED SUMS

A. BASE BID (all-inclusive)

The undersigned agrees to fulfill the terms of the contract to perform work for the stipulated lump sum of:

(Written) _____

(Numeric) _____ ($ _____)

DEMOBILIZATION (included in Base Bid above)

3% of Contract Sum _____ ($_____)

B. TIME

The undersigned agrees to fulfill the terms of the contract within _____ days of the Notice to Proceed.

Number of Days X $3,000/day _____ ($_____)

C. "A" + "B" (COSTS + TIME)

A. (Base Bid) + B. (Time) _____ ($_____)

D. ALTERNATES

The Alternates are described in Section 012300 ALTERNATES.

~~Add-Alternate No. 2: The Strand 2-Hole Trailhead, Plaza, Site Walls, Parking Lot Lighting, and Parking Lot: ($_____)~~

Add-Alternate No. 1: Bridge F-407 (Catenary Bridge), Knuckle 25 and Knuckle 27: ($_____)

Add-Alternate No. 2: The Strand 2-Hole Trailhead, Plaza, Site Walls, Parking Lot Lighting, and Parking Lot: ($_____)

Portion of Work	Substantial Completion Date

, subject to adjustments of this Contract Time as provided in the Contract Documents.
(Insert provisions, if any, for liquidated damages relating to failure to achieve Substantial Completion on time or for bonus payments for early completion of the Work.)

«→»Failure to achieve Substantial Completion within the Contract Time shall result in liquidated damages imposed upon Contractor equal to $3,000 per day.

ARTICLE 4 CONTRACT SUM

§ 4.1 The Owner shall pay the Contractor the Contract Sum in current funds for the Contractor's performance of the Contract. The Contract Sum shall be « » ($ « »), subject to additions and deductions as provided in the Contract Documents.

§ 4.2 The Contract Sum is based upon the following alternates, if any, which are described in the Contract Documents and are hereby accepted by the Owner:
(State the numbers or other identification of accepted alternates. If the bidding or proposal documents permit the Owner to accept other alternates subsequent to the execution of this Agreement, attach a schedule of such other alternates showing the amount for each and the date when that amount expires.)

« »

§ 4.3 Unit prices, if any:
(Identify and state the unit price; state quantity limitations, if any, to which the unit price will be applicable.)

Item	Units and Limitations	Price Per Unit ($0.00)

§ 4.4 Allowances included in the Contract Sum, if any: NONE
(Identify allowance and state exclusions, if any, from the allowance price.)

Item	Price

ARTICLE 5 PAYMENTS

§ 5.1 PROGRESS PAYMENTS

§ 5.1.1 Based upon Applications for Payment submitted to the Architect by the Contractor and Certificates for Payment issued by the Architect, the Owner shall make progress payments on account of the Contract Sum to the Contractor as provided below and elsewhere in the Contract Documents.

§ 5.1.2 The period covered by each Application for Payment shall be one calendar month ending on the last day of the month, or as follows:

« »

§ 5.1.3 Provided that an Application for Payment is received by the Architect not later than the «→»5th day of a month, the Owner shall make payment of the certified amount to the Contractor not later than the «→»20th day of the «→»same month. If an Application for Payment is received by the Architect after the application date fixed above, payment shall be made by the Owner not later than «–thirty» («–30») days after the Architect receives the Application for Payment.
(Federal, state or local laws may require payment within a certain period of time.)

§ 5.1.4 Each Application for Payment shall be based on the most recent schedule of values submitted by the Contractor in accordance with the Contract Documents. The schedule of values shall allocate the entire Contract Sum among the various portions of the Work. The schedule of values shall be prepared in such form and supported

AIA Document A101™ – 2007. Copyright © 1915, 1918, 1925, 1937, 1951, 1958, 1961, 1963, 1967, 1974, 1977, 1987, 1991, 1997 and 2007 by The American Institute of Architects. **All rights reserved. WARNING: This AIA® Document is protected by U.S. Copyright Law and International Treaties. Unauthorized reproduction or distribution of this AIA® Document, or any portion of it, may result in severe civil and criminal penalties, and will be prosecuted to the maximum extent possible under the law.** This draft was produced by AIA software at 14:13:57 on 02/27/2011 under Order No.5675413188_1 which expires on 07/28/2011, and is not for resale.
User Notes: (1131293507)

THE PARKLANDS OF FLOYDS FORK – PROJECT 4A
THE STRAND, TURKEY RUN PARK & BROAD RUN PARK

SECTION 012200 - UNIT PRICES

PART 1 - GENERAL

1.1 RELATED DOCUMENTS

A. Drawings and general provisions of the Contract, including General and Supplementary Conditions and other Division 01 Specification Sections, apply to this Section.

1.2 SUMMARY

A. This Section includes administrative and procedural requirements for unit prices.

B. Related Sections include the following:
   1. Division 01 Section "Contract Modification Procedures" for procedures for submitting and handling Change Orders.

1.3 DEFINITIONS

A. Unit price is an amount proposed by bidders and approved by the Owner, as a price per unit of measurement for materials or services added to or deducted from the Contract Sum as requested and approved by the Owner.

1.4 PROCEDURES

A. Unit prices include all necessary material, cost for delivery, installation, insurance, applicable taxes, overhead, and profit.

B. List of Unit Prices: A list of unit prices is included in the Bid Form. Specification Sections referenced in the schedule contain requirements for materials described under each unit price.

C. Measurement and Payment for Change Orders only: Refer to individual Specification Sections for establishment of unit prices.

D. Owner reserves the right to reject Contractor's measurement of work-in-place that involves use of established unit prices and to have this work measured, at Owner's expense, by an independent surveyor.

1.5 UNIT PRICE LIST

THE PARKLANDS OF FLOYDS FORK – PROJECT 4A
THE STRAND, TURKEY RUN PARK & BROAD RUN PARK

A. The following Unit Price List is for reference only and is not to be submitted with the Bid Form. The awarded contractor will be required to submit the completed final Unit Price List to the Owner for review and concurrence prior to proceeding as stated in the contract agreements.

ITEM	UNIT OF MEASURE	UNIT PRICE
SITE WORK		
Minor Excavation (Earth) < 50 Cu. Yd	Per Cu. Yd.	_____
Major Excavation (Earth) > 50 Cu. Yd	Per Cu. Yd.	_____
Minor Excavation (Trench)	Per Cu. Yd.	_____
(Remove unsuitable soil & replace w/ compacted acceptable soils/engineered fill)		
Backfill & Compaction (Material from site)	Per Cu. Yd.	_____
Borrow (Hauled in & compacted & graded)	Per Cu. Yd.	_____
DGA (In place and compacted)	Per Cu. Yd	_____
Embankment (Placed, compacted & graded)	Per Cu. Yd.	_____
Park Road Asphalt Pavement, complete	Per Sq. Yd.	_____
Louisville Loop Concrete Pvmt, complete	Per Sq. Yd.	_____
Louisville Loop Asphalt Pavement, complete	Per Sq. Yd.	_____
Parking Asphalt Pavement, complete	Per Sq. Yd.	_____
Park Road Asphalt Base	Per Ton	_____
Park Road Asphalt Surface	Per Ton	_____
Lime\Cement (6%) Stabilized Roadbed Complete	Per Sq. Yd.	_____
4” Concrete Sidewalk, complete	Per Sq. Yd.	_____
6” Concrete Pavement, Installed	Per Sq. Yd.	_____
10” Concrete Pavement, Installed	Per Sq. Yd.	_____
Silicone Joint Sealing-Concrete	Per Lin. Ft.	_____
Mill 1 ½” & Install Asphalt Surface	Per Sq. Yd.	_____
6” Header Curb	Per Lin. Ft.	_____
6” Integral Curb	Per Lin. Ft.	_____
Weathering Steel “W” Guardrail, Installed	Per Lin. Ft.	_____
Galvanized Steel “W” Guardrail, Installed	Per Lin. Ft.	_____
Galvanized Guardrail Term Sect. No. 1	Ea	_____
Weathering Steel Guardrail Term Sect No. 1	Ea	_____
Guardrail End Treatment Type 4A	Ea	_____
Guardrail End Treatment Type 4A-Painted	Ea	_____
3” Water Service Water Line	Per Lin. Ft.	_____
1-1/2” Water Service Water Line	Per Lin. Ft.	_____

THE PARKLANDS OF FLOYDS FORK – PROJECT 4A
THE STRAND, TURKEY RUN PARK & BROAD RUN PARK

1” Water Service Water Line	Per Lin. Ft.	_____
3” Water Line Valve	Each	_____
Seatonville Road Waterline Relocation, labor and testing complete	Lump Sum	_____
Stout Road Waterline Relocation, labor and testing complete	Lump Sum	_____
Fairmount Road Bridge F409 Waterline Relocation, labor and testing complete	Lump Sum	_____
Fairmount Road Big Vista Valley Trailhead Waterline Relocation, labor and testing complete	Lump Sum	_____
Miscellaneous 8" Waterline Relocation, labor and testing complete	Per Lin. Ft.	_____
Miscellaneous 12" Waterline Relocation, labor and testing complete	Per Lin. Ft.	_____
Yard Hydrant	Each	_____
Ejector Pump	Each	_____
1500 gallon Septic Storage Tank	Each	_____
2000 gallon Septic tank	Each	_____
Distribution Box	Each	_____
Lateral, complete	Per Lin. Ft.	_____
4” Dia. Schedule 40 PVC Drain Line	Per Lin. Ft.	_____
12” RCP (In place & backfilled)	Per Lin. Ft.	_____
15” RCP (In place & backfilled)	Per Lin. Ft.	_____
18” RCP (In place & backfilled)	Per Lin .Ft.	_____
24” RCP (In place & backfilled)	Per Lin. Ft.	_____
30” RCP (In place & backfilled)	Per Lin. Ft.	_____
36” RCP (In place & backfilled)	Per Lin. Ft.	_____
42” RCP (In place & backfilled)	Per Lin. Ft.	_____
48” RCP (in place & backfilled)	Per Lin. Ft.	_____
54” RCP (In place & backfilled)	Per Lin. Ft.	_____
60” RCP (In place & backfilled)	Per Lin. Ft.	_____
23”x14” RCEP (In place & backfilled)	Per Lin. Ft.	_____
30”x19” RCEP (In place & backfilled)	Per Lin. Ft.	_____
38”x24” RCEP (In place & backfilled)	Per Lin. Ft.	_____
45”x29” RCEP (In place & backfilled)	Per Lin. Ft.	_____

THE PARKLANDS OF FLOYDS FORK – PROJECT 4A
THE STRAND, TURKEY RUN PARK & BROAD RUN PARK

53”x34” RCEP (In place & backfilled)	Per Lin. Ft.	_____
60”x38” RCEP (In place & backfilled)	Per Lin. Ft.	_____
68”x43” RCEP (In place & backfilled)	Per Lin. Ft.	_____
12” Dry Laid Creekstone Headwall	Each	_____
15” Dry Laid Creekstone Headwall	Each	_____
18” Dry Laid Creekstone Headwall	Each	_____
24” Dry Laid Creekstone Headwall	Each	_____
30” Dry Laid Creekstone Headwall	Each	_____
36” Dry Laid Creekstone Headwall	Each	_____
42” Dry Laid Creekstone Headwall	Each	_____
48” Dry Laid Creekstone Headwall	Each	_____
54” Dry Laid Creekstone Headwall	Each	_____
60” Dry Laid Creekstone Headwall	Each	_____
23”x14” Dry Laid Creekstone Headwall	Each	_____
30”x19” Dry Laid Creekstone Headwall	Each	_____
38”x24” Dry Laid Creekstone Headwall	Each	_____
45”x29” Dry Laid Creekstone Headwall	Each	_____
53”x34” Dry Laid Creekstone Headwall	Each	_____
60”x38” Dry Laid Creekstone Headwall	Each	_____
68”x43” Dry Laid Creekstone Headwall	Each	_____
30”x12” Trench Drain (CIP with grate)	Lin. Ft.	_____
Bumper Block (Installed)	Each	_____
Erosion Control Blanket	Per Sq. Yd.	_____
Silt Fencing	Per Lin. Ft.	_____
Reinforced Silt Fencing	Per Lin. Ft.	_____
Stone Bag Inlet Protection	Each	_____
Winged Headwall Inlet Protection	Each	_____
Straight Headwall Inlet Protection	Each	_____
Stone Bag Check Dam in Small Ditch	Each	_____
Rock Ditch Check	Each	_____
Stabilized Construction Entrance	Per Sq. Yd.	_____
Tree Protection Fencing	Per Lin. Ft.	_____
30”x12” Headwall - MSD DH-01-01 (Modified)	Each	_____
Rock Fence (42”)	Per Lin. Ft.	_____
Rock Fence (48”)	Per Lin. Ft.	_____

THE PARKLANDS OF FLOYDS FORK – PROJECT 4A
THE STRAND, TURKEY RUN PARK & BROAD RUN PARK

Concrete Seat Walls	Per Lin. Ft.	_____
Temporary Seeding	Per Acre	_____
Mown Lawn Seed	Per Acre	_____
Mown Lawn Seed	Per Sq. Ft	_____
Wildflower Meadow Seed Mix - Wet	Per Acre	_____
Wildflower Meadow Seed Mix - Dry	Per Acre	_____

RETAINING WALLS

Structure Granular Backfill	Cu. Yd.	_____
Fabric – Geotextile, Type I	Sq. Yd.	_____
Retaining Wall – Segmental	Sq. Yd.	_____
Retaining Wall Erection – Segmental	Sq. Yd.	_____
Retaining Wall- Allen Block Complete	Sq. Yd.	_____
Retaining Wall- Redi-Rock Complete	Sq Yd	_____
Leveling Pad, Crushed Aggregate	Lin. Ft.	_____
Structure Excavation, Common	Cu. Yd.	_____
Structure Excavation, Rock	Cu. Yd.	_____

BRIDGES F-401 – F411 (less F-407)

Structure Granular Backfill	Cu. Yd.	_____
Channel Lining Class IA	Ton	_____
Fabric – Geotextile, Type I	Sq. Yd.	_____
Retaining Wall – Gabion	Cu. Yd.	_____
Masonry Coating	Sq. Yd.	_____
Structure Excavation, Common	Cu. Yd.	_____
Structure Excavation, Rock	Cu. Yd.	_____
Cofferdam	Lump Sum	_____
6” Reinforced Concrete Slopewall	Sq. Yd.	_____
Cyclopean Stone Riprap	Ton	_____
Test Pile	Lin. Ft.	_____
Pre-Drilling for Piles	Lin. Ft.	_____
Piles-Steel HP12x53	Lin. Ft.	_____
Piles-Steel HP14x73	Lin. Ft.	_____
Pile Points, 12”	Each	_____
Pile Points, 14”	Each	_____
Concrete Class “A”	Cu. Yd.	_____

THE PARKLANDS OF FLOYDS FORK – PROJECT 4A
THE STRAND, TURKEY RUN PARK & BROAD RUN PARK

Concrete Class "AA"	Cu. Yd.	_____
Steel Reinforcement	Lbs.	_____
Steel Reinforcement, Epoxy Coated	Lbs.	_____
Structural Steel-Bridge F411 (Lbs given in plans)	Lump Sum	_____
Shear Connectors (Lbs given in plans)	Lump Sum	_____
Armored Edge	Lin. Ft.	_____
Approach Slab	Sq. Yd.	_____
Stainless Steel Railing	Lin. Ft.	_____
Variegated Limestone Blocks	Ton	_____
Roughback Finish Limestone Blocks	Ton	_____
Smooth Finish Limestone Blocks	Ton	_____
Cold Fluid-Applied Waterproofing	Sq. Yd.	_____
Pre Engineered Pedestrian Bridge	Each	_____

BIOENGINEERING AT THE BRIDGES

Coir Matting	Sq. Yd.	_____
Live Branch Layering	Per Lin. Ft.	_____
Live Staking	Per Lin. Ft.	_____
Rock Toe	Per Lin. Ft.	_____
Soil / Riprap	CY	_____
Geotextile Fabric, Type 1	SY	_____
Native Seed	Lbs.	_____
Joint Plantings (1-gallon)	Each	_____
Shrubs (1 to 3-gallon)	Each	_____
Midstory Trees (1.5 to 2.0-inch caliper)	Each	_____
Canopy Trees (2.5 to 3.0-inch caliper)	Each	_____
Mown Lawn Sod	Per Sq. Ft.	_____
Variegated Limestone Rock	Per Ton	_____
Class II Channel Lining	Per Ton	_____

ELECTRICAL

4" PVC Conduit in trench with DGA backfill, Installed	Per Lin. Ft.	_____
Type OL1 with concrete base, Installed	Each	_____

THE PARKLANDS OF FLOYDS FORK – PROJECT 4A
THE STRAND, TURKEY RUN PARK & BROAD RUN PARK

Three (3) #3/0, 1 #4 ground in 2-1/2" schedule 40 pvc concrete encased conduits (schedule #80 pvc where exposed and for ells) with one additional empty 2-1/2" spare conduit. Minimum bury at 36".	Per Lin. Ft.	_____
One (1) 1-1/2" schedule 80 pvc conduit. Minimum bury at 36"	Per Lin. Ft.	_____

ARCHITECTURE

4000 psi Concrete	Per Cu. Yard	_____
Structural Steel	Per lb.	_____
Reinforcing Steel	Per lb.	_____
Board-formed concrete finish - 2-Hole Trailhead	Package	_____
Board-formed concrete finish - 4-Hole Trailhead	Package	_____
Colored Concrete	Per Cu. Ft.	_____
Sheet Metal Roof, Flashing & Trim	Per Sq. Ft.	_____
Field Applied Wood Stain, one coat	Per Sq. Ft.	_____
High Performance Coatings	Per Sq. Ft.	_____
Wood Siding	Per Sq. Ft.	_____
Glulam Package – 2-Hole Trailhead	Each	_____
Glulam Package – 4-Hole Trailhead	Each	_____
Glulam Package – Kiosk	Each	_____
12" X 51" Window	Each	_____
12" X 45" Window	Each	_____
12" X 18" Window	Each	_____
Hollow Metal Door & Hardware	Each	_____
Trailhead Sign Package - 2-Hole Trailhead	Each	_____
Trailhead Sign Package - 4-Hole Trailhead	Each	_____
Toilet Room Accessory Package- 2-Hole Trailhead	Each	_____
Toilet Room Accessory Package- 4-Hole Trailhead	Each	_____
Light Fixture Package- 2-Hole Trailhead	Each	_____
Light Fixture Package- 4-Hole Trailhead	Each	_____
Plumbing Fixture Package- 2-Hole Trailhead	Each	_____
Plumbing Fixture Package- 4-Hole Trailhead	Each	_____
Mechanical Package- 2-Hole Trailhead	Each	_____
Mechanical Package- 4-Hole Trailhead	Each	_____

ADD-ALTERNATE No. 1: Bridge F-407 (CATENARY BRIDGE), KNUCKLE 25 and KNUCKLE 26

Structure Excavation, Common	Cu. Yd.	_____
Structure Excavation, Rock	Cu. Yd.	_____
Rock Probes, over 3-foot depth	Lin. Ft.	_____
Karstic Formation Clay Seam Removal	Lin. Ft.	_____
Karstic Formation Void Grouting	Lin. Ft.	_____
Furnish and Install Rock Anchors	Lin. Ft.	_____
Rock Anchor Load Test	Cu. Yd.	_____
Structure Concrete, f'c = 4 ksi	Cu. Yd.	_____
Concrete reinforcing, fy = 60 ksi	Lbs.	_____
Concrete reinforcing, fy = 40 ksi	Lbs.	_____
ABS drain pipe, 4"	Lin. Ft.	_____
Structure Granular Backfill	Cu. Yd.	_____
Fabric – Geotextile, Type I	Sq. Yd.	_____
Minor Excavation (Trench)	Cu. Yd.	_____
(Remove unsuitable soil & replace w/ compacted acceptable soils/engineered fill)		
Backfill & Compaction (Material from site)	Cu. Yd.	_____
Borrow (Hauled in & compacted & graded)	Cu. Yd.	_____
4" Concrete Sidewalk, complete	Sq. Yd.	_____
4" Dia. Schedule 40 PVC Drain Line	Lin. Ft.	_____
Erosion Control Blanket	Sq. Yd.	_____
Silt Fencing	Lin. Ft.	_____
Reinforced Silt Fencing	Lin. Ft.	_____
Tree Protection Fencing	Lin. Ft.	_____
Structural Steel, Galvanized, A36	Lbs.	_____
Structural Strand, Class A coating, 5"	Lin. Ft.	_____
Structural Strand, Class A coating, 1-1/4"	Lin. Ft.	_____
Wire Rope, Class A coating, 1/2"	Lin. Ft.	_____
(^^^ Inlcudes, spelter sockets, pins, ferrules and prestretching ^^^)		
Elastomeric strips, deck, 3" x 1/16	Lin. Ft.	_____
Elastomeric pads, saddles and clamps	Sq. Ft.	_____
Cyclone Mesh, galvanized	Lin. Ft.	_____
2x8 IPE (LAPACHO) Wood Decking	Lin. Ft.	_____
Carriage Bolts, Galvanized, 1/2"	Per 100	_____

THE PARKLANDS OF FLOYDS FORK – PROJECT 4A
THE STRAND, TURKEY RUN PARK & BROAD RUN PARK

ASTM A490X bolts, Galvanized, 7/8"	Per 100	_____
ASTM A490X bolts, Galvanized, 3/4"	Per 100	_____
ASTM A325X bolts, Galvanized, 3/4"	Per 100	_____
ASTM A325X bolts, Galvanized, 5/8"	Per 100	_____
Concrete Seat Walls	Lin. Ft.	_____
4000 psi Concrete	Cu. Yd.	_____
Reinforcing Steel	Per Lb.	_____

ADD-ALTERNATE NO. 2: THE STRAND 2-HOLE TRAILHEAD, PLAZA, SITE WALLS, PARKING LOT LIGHTING, AND PARKING LOT

Rock Fence	Per Lin. Ft.	_____
Concrete Seat Walls	Per Lin. Ft.	_____
4000 psi Concrete	Per Cu. Yard	_____
Structural Steel	Per lb.	_____
Reinforcing Steel	Per lb.	_____
Board-formed concrete finish - 2-Hole Trailhead	Package	_____
Colored Concrete	Per Cu. Ft.	_____
Sheet Metal Roof, Flashing & Trim	Per Sq. Ft.	_____
Field Applied Wood Stain, one coat	Per Sq. Ft.	_____
High Performance Coatings	Per Sq. Ft.	_____
Wood Siding	Per Sq. Ft.	_____
Glulam Package – 2-Hole Trailhead	Each	_____
12" X 51" Window	Each	_____
12" X 45" Window	Each	_____
12" X 18" Window	Each	_____
Hollow Metal Door & Hardware	Each	_____
Trailhead Sign Package - 2-Hole Trailhead	Each	_____
Toilet Room Accessory Package- 2-Hole Trailhead	Each	_____
Light Fixture Package- 2-Hole Trailhead	Each	_____
Plumbing Fixture Package- 2-Hole Trailhead	Each	_____
Mechanical Package- 2-Hole Trailhead	Each	_____
Minor Excavation (Trench)	Per Cu. Yd.	_____
(Remove unsuitable soil & replace w/ compacted acceptable soils/engineered fill)		
Backfill & Compaction (Material from site)	Per Cu. Yd.	_____
Borrow (Hauled in & compacted & graded)	Per Cu. Yd.	_____

THE PARKLANDS OF FLOYDS FORK – PROJECT 4A
THE STRAND, TURKEY RUN PARK & BROAD RUN PARK

DGA (In place and compacted)	Per Cu. Yd	_____
Parking Asphalt Pavement, complete	Per Sq. Yd.	_____
4” Concrete Sidewalk, complete	Per Sq. Yd.	_____
6” Header Curb	Per Lin. Ft.	_____
6” Integral Curb	Per Lin. Ft.	_____
3” Water Service Water Line	Per Lin. Ft.	_____
1-1/2” Water Service Water Line	Per Lin. Ft.	_____
1500 gallon Septic Storage Tank	Each	_____
2000 gallon Septic tank	Each	_____
Distribution Box	Each	_____
Lateral, complete	Per Lin. Ft.	_____
4” Dia. Schedule 40 PVC Drain Line	Per Lin. Ft.	_____
38”x24” RCEP (In place & backfilled)	Per Lin. Ft.	_____
24” Dry Laid Creekstone Headwall	Each	_____
Bumper Block (Installed)	Each	_____
Erosion Control Blanket	Per Sq. Yd.	_____
Silt Fencing	Per Lin. Ft.	_____
Stone Bag Inlet Protection	Each	_____
Reinforced Silt Fencing	Per Lin. Ft.	_____
Winged Headwall Inlet Protection	Each	_____
Stone Bag Check Dam in Small Ditch	Each	_____
Tree Protection Fencing	Per Lin. Ft.	_____
Mown Lawn Seed	Per Acre	_____
Wildflower Meadow Seed Mix - Wet	Per Acre	_____
Minor Excavation (Earth) < 50 Cu. Yd	Per Cu. Yd.	_____
Wildflower Meadow Seed Mix - Dry	Per Acre	_____
4” PVC Conduit in trench with DGA backfill, Installed	Per Lin. Ft.	_____
Type OL1 with concrete base, Installed	Each	_____
Three (3) #3/0, 1 #4 ground in 2-1/2” schedule 40 pvc concrete encased conduits (schedule #80 pvc where exposed and for ells) with one additional empty 2-1/2” spare conduit. Minimum bury at 36”.	Per Lin. Ft.	_____
One (1) 1-1/2” schedule 80 pvc conduit. Minimum bury at 36”	Per Lin. Ft.	_____

~~ADD-ALTERNATE NO. 2: GALVANIZED FINISH ON METAL PIPE AND TUBE RAILINGS~~

~~Galvanized Finish~~	~~Lump Sum~~	_____

PART 2 - PRODUCTS (Not Used)

PART 3 - EXECUTION (Not Used)

END OF SECTION 012200

D. Schedule: A schedule of alternates is included at the end of this Section. Specification Sections referenced in schedule contain requirements for materials necessary to achieve the work described under each alternate.

PART 2 - PRODUCTS (Not Used)

PART 3 - EXECUTION

3.1 SCHEDULE OF ALTERNATES

A. Add-Alternate No. 1: Bridge F-407 (Catenary Bridge), Knuckle 25 and Knuckle26: Construct Bridge F-407 as shown in the bridge plans. Construct the North and South Plazas as shown on drawings.

1. Refer to Drawing Sheets: BR-S701, BR-S702, BR-S703, BR-S704, BR-S705, BR-S706, BR-S707, BR-S708, BR-S709, BR-S710, BR-S711, BR-S712, BR-S713, BR-S714, BR-S715, BR-S716, BR-S717, BR-S718, BR-S719, BR-S720, A7-105, A7-301.

2. Refer to Specification Sections: 012200, 012500, 013300, 014000, 016000, 017300, 017419, 017700, 017839, 033000, 033002, 033300, 047200, 051200, 051201, 051202, 051203, 051204, 055213, 061540, 316200, 033001, 311000, 312000, 312001, 329210, 316200, 321373, 329300.

B. Add-Alternate No. 2: The Strand 2-Hole Trailhead, Plaza, Site Walls, Parking Lot Lighting, and Parking Lot: Construct building as shown on drawings. Include all necessary structural, electrical, plumbing and mechanical systems, carpentry, hardware, etc. for complete building as designed.

1. Refer to Drawing Sheets: ST-C2.3, ST-C3.3, ST-C5.1, ST-C6.1, ST-C7.1, ST-C7.3, ST-C7.4, ST-C7.5, ST-C8.1, ST-C8.2, C9.1, C9.2, RS-C21, RS-C3, SP1-101, S1-001, S1-101, S1-201, S1-301, A1-101, A1-201, A1-301, A1-302, A1-303, A1-401, P1-101, M1-100, E1-001, E1-101, E1-102, A7-301.

2. Refer to Specification Sections: 012200, 012500, 013300, 014000, 016000, 017300, 017419, 017700, 017839, 033000, 044301, 047200, 061063, 061600, 061801, 062013, 071900, 072100, 076100, 076200, 079200, 081113, 085201, 087100, 088000, 099113, 099300, 099600, 102800, 200100, 200200, 200300, 200500, 201100, 201300, 202100, 202200, 202300, 202400, 202500, 203100, 220100, 220200, 230200, 231100, 231200, 260501, 260502, 260503, 260504, 260508, 260510, 260519, 260526, 260531, 260533, 260544, 260553, 262400, 262726, 264313, 265113, 311000, 312000, 321216, 321313, 321373, 321723, 329210, 331100, 334100.

END OF SECTION 012300

SECTION 055213 - PIPE AND TUBE RAILINGS

PART 1 - GENERAL

1.1 RELATED DOCUMENTS

A. Drawings and general provisions of the Contract, including General and Supplementary Conditions and Division 01 Specification Sections, apply to this Section.

1.2 SUMMARY

A. Section Includes:

1. Steel pipe and tube railings.

1.3 COORDINATION

A. Coordinate selection of shop primers with topcoats to be applied over them. Comply with paint and coating manufacturers' written recommendations to ensure that shop primers and topcoats are compatible with one another.

B. Coordinate installation of anchorages for railings. Furnish setting drawings, templates, and directions for installing anchorages, including sleeves, concrete inserts, anchor bolts, and items with integral anchors, that are to be embedded in concrete or masonry. Deliver such items to Project site in time for installation.

1.4 ACTION SUBMITTALS

A. Shop Drawings: Include plans, elevations, sections, details, and attachments to other work.

B. Samples: For each type of exposed finish required.

1. Sections of each distinctly different linear railing member, including handrails, top rails, posts, and balusters.
2. Fittings and brackets.
3. Assembled Sample of railing system, made from full-size components, including top rail, post, handrail, and infill. Sample to be full height.

    a. Show method of connecting and finishing members at intersections.

C. Delegated-Design Submittal: For railings, including analysis data signed and sealed by the qualified professional engineer responsible for their preparation.

1.5 INFORMATIONAL SUBMITTALS

A. Welding certificates.

B. Paint Compatibility Certificates: From manufacturers of topcoats applied over shop primers certifying that shop primers are compatible with topcoats.

1.6 QUALITY ASSURANCE

A. Welding Qualifications: Qualify procedures and personnel according to the following:

1. AWS D1.1/D1.1M, "Structural Welding Code - Steel."

1.7 DELIVERY, STORAGE, AND HANDLING

A. Protect mechanical finishes on exposed surfaces from damage by applying a strippable, temporary protective covering before shipping.

1.8 FIELD CONDITIONS

A. Field Measurements: Verify actual locations of walls and other construction contiguous with metal fabrications by field measurements before fabrication.

PART 2 - PRODUCTS

2.1 MANUFACTURERS

A. Steel Pipe and Tube Railings:

1. Manufacturers: Subject to compliance with requirements, available manufacturers offering products that may be incorporated into the Work include, but are not limited to, the following:

a. Wagner, R & B, Inc.

B. Source Limitations: Obtain each type of railing from single source from single manufacturer.

2.2 PERFORMANCE REQUIREMENTS

A. Delegated Design: Engage a qualified professional engineer, as defined in Section 014000 "Quality Requirements," to design railings, including attachment to building construction.

B. Structural Performance: Railings, including attachment to building construction, shall withstand the effects of gravity loads and the following loads and stresses within limits and under conditions indicated:

1. Handrails and Top Rails of Guards:

a. Uniform load of 50 lbf/ ft. applied in any direction.
b. Concentrated load of 200 lbf applied in any direction.
c. Uniform and concentrated loads need not be assumed to act concurrently.

2. Infill of Guards:

a. Concentrated load of 50 lbf applied horizontally on an area of 1 sq. ft..
b. Infill load and other loads need not be assumed to act concurrently.

C. Thermal Movements: Allow for thermal movements from ambient and surface temperature changes.

1. Temperature Change: 120 deg F, ambient; 180 deg F.

2.3 METALS, GENERAL

A. Metal Surfaces, General: Provide materials with smooth surfaces, without seam marks, roller marks, rolled trade names, stains, discolorations, or blemishes.

B. Brackets, Flanges, and Anchors: Cast or formed metal of same type of material and finish as supported rails unless otherwise indicated.

2.4 STEEL AND IRON

A. Tubing: ASTM A 500 (cold formed) or ASTM A 513.

B. Pipe: ASTM A 53/A 53M, Type F or Type S, Grade A, Standard Weight (Schedule 40), unless another grade and weight are required by structural loads.

1. Provide galvanized finish for exterior installations and where indicated.

C. Plates, Shapes, and Bars: ASTM A 36/A 36M.

2.5 FASTENERS

A. General: Provide the following:
1. Hot-Dip Galvanized Railings: Type 304 stainless-steel or hot-dip zinc-coated steel fasteners complying with ASTM A 153/A 153M or ASTM F 2329 for zinc coating.
2. Provide exposed fasteners with finish matching appearance, including color and texture, of railings.

B. Fasteners for Anchoring Railings to Other Construction: Select fasteners of type, grade, and class required to produce connections suitable for anchoring railings to other types of construction indicated and capable of withstanding design loads.

C. Fasteners for Interconnecting Railing Components:

1. Provide concealed fasteners for interconnecting railing components and for attaching them to other work, unless otherwise indicated.

2.6 MISCELLANEOUS MATERIALS

A. Welding Rods and Bare Electrodes: Select according to AWS specifications for metal alloy welded.

B. Etching Cleaner for Galvanized Metal: Complying with MPI#25.

C. Galvanizing Repair Paint: High-zinc-dust-content paint complying with SSPC-Paint 20 and compatible with paints specified to be used over it.

D. Shop Primers: Provide primers that comply with Section 099600 "High-Performance Coatings."

E. Bituminous Paint: Cold-applied asphalt emulsion complying with ASTM D 1187/D 1187M.

F. Nonshrink, Nonmetallic Grout: Factory-packaged, nonstaining, noncorrosive, nongaseous grout complying with ASTM C 1107/C 1107M. Provide grout specifically recommended by manufacturer for interior and exterior applications.

G. Anchoring Cement: Factory-packaged, nonshrink, nonstaining, hydraulic-controlled expansion cement formulation for mixing with water at Project site to create pourable anchoring, patching, and grouting compound.

1. Water-Resistant Product: At exterior locations and where indicated provide formulation that is resistant to erosion from water exposure without needing protection by a sealer or waterproof coating and that is recommended by manufacturer for exterior use.

2.7 FABRICATION

A. General: Fabricate railings to comply with requirements indicated for design, dimensions, member sizes and spacing, details, finish, and anchorage, but not less than that required to support structural loads.

B. Shop assemble railings to greatest extent possible to minimize field splicing and assembly. Disassemble units only as necessary for shipping and handling limitations. Clearly mark units for reassembly and coordinated installation. Use connections that maintain structural value of joined pieces.

C. Cut, drill, and punch metals cleanly and accurately. Remove burrs and ease edges to a radius of approximately 1/32 inch unless otherwise indicated. Remove sharp or rough areas on exposed surfaces.

D. Form work true to line and level with accurate angles and surfaces.

E. Fabricate connections that are exposed to weather in a manner that excludes water. Provide weep holes where water may accumulate.

F. Cut, reinforce, drill, and tap as indicated to receive finish hardware, screws, and similar items.

G. Connections: Fabricate railings with welded connections unless otherwise indicated.

H. Welded Connections: Cope components at connections to provide close fit, or use fittings designed for this purpose. Weld all around at connections, including at fittings.

1. Use materials and methods that minimize distortion and develop strength and corrosion resistance of base metals.
2. Obtain fusion without undercut or overlap.
3. Remove flux immediately.
4. At exposed connections, finish exposed surfaces smooth and blended so no roughness shows after finishing and welded surface matches contours of adjoining surfaces.

I. Nonwelded Connections: Connect members with concealed mechanical fasteners and fittings. Fabricate members and fittings to produce flush, smooth, rigid, hairline joints.

1. Fabricate splice joints for field connection using an epoxy structural adhesive if this is manufacturer's standard splicing method.

J. Form Changes in Direction as Follows:

1. As detailed.

K. For changes in direction made by bending, use jigs to produce uniform curvature for each repetitive configuration required. Maintain cross section of member throughout entire bend without buckling, twisting, cracking, or otherwise deforming exposed surfaces of components.

L. Close exposed ends of railing members with prefabricated end fittings.

M. Provide wall returns at ends of wall-mounted handrails unless otherwise indicated. Close ends of returns unless clearance between end of rail and wall is 1/4 inch or less.

N. Brackets, Flanges, Fittings, and Anchors: Provide wall brackets, flanges, miscellaneous fittings, and anchors to interconnect railing members to other work unless otherwise indicated.

O. Provide inserts and other anchorage devices for connecting railings to concrete or masonry work. Fabricate anchorage devices capable of withstanding loads imposed by railings. Coordinate anchorage devices with supporting structure.

2.8 STEEL AND IRON FINISHES

A. Galvanized Railings:

1. Hot-dip galvanize exterior steel railings, including hardware, after fabrication.
2. Comply with ASTM A 123/A 123M for hot-dip galvanized railings.
3. Comply with ASTM A 153/A 153M for hot-dip galvanized hardware.
4. Do not quench or apply post galvanizing treatments that might interfere with paint adhesion.
5. Fill vent and drain holes that are exposed in the finished Work, unless indicated to remain as weep holes, by plugging with zinc solder and filing off smooth.

B. For galvanized railings, provide hot-dip galvanized fittings, brackets, fasteners, sleeves, and other ferrous components.

C. Preparing Galvanized Railings for Shop Priming: After galvanizing, thoroughly clean railings of grease, dirt, oil, flux, and other foreign matter, and treat with etching cleaner. Follow paint manufacturer's instructions. First Solvent Clean per SSPC-SP1 and apply a test patch. Allow paint to dry at least one week before testing adhesion. If adhesion is poor, brush blasting per SSPC-SP7 is necessary to remove these treatments.

PART 3 - EXECUTION

3.1 INSTALLATION, GENERAL

A. Fit exposed connections together to form tight, hairline joints.

B. Perform cutting, drilling, and fitting required for installing railings. Set railings accurately in location, alignment, and elevation; measured from established lines and levels and free of rack.

1. Do not weld, cut, or abrade surfaces of railing components that are coated or finished after fabrication and that are intended for field connection by mechanical or other means without further cutting or fitting.
2. Set posts plumb within a tolerance of 1/16 inch in 3 feet.
3. Align rails so variations from level for horizontal members and variations from parallel with rake of steps and ramps for sloping members do not exceed 1/4 inch in 12 feet.

C. Control of Corrosion: Prevent galvanic action and other forms of corrosion by insulating metals and other materials from direct contact with incompatible materials.

D. Adjust railings before anchoring to ensure matching alignment at abutting joints.

E. Fastening to In-Place Construction: Use anchorage devices and fasteners where necessary for securing railings and for properly transferring loads to in-place construction.

3.2 RAILING CONNECTIONS

A. Welded Connections: Use fully welded joints for permanently connecting railing components. Comply with requirements for welded connections in "Fabrication" Article whether welding is performed in the shop or in the field.

B. Expansion Joints: Install expansion joints at locations indicated but not farther apart than required to accommodate thermal movement. Provide slip-joint internal sleeve extending 2 inches beyond joint on either side, fasten internal sleeve securely to one side, and locate joint within 6 inches of post.

3.3 ANCHORING POSTS

A. Form or core-drill holes not less than 5 inches deep and 3/4 inch larger than OD of post for installing posts in concrete. Clean holes of loose material, insert posts, and fill annular space between post and concrete with nonshrink, nonmetallic grout, mixed and placed to comply with anchoring material manufacturer's written instructions.

B. Leave anchorage joint exposed with anchoring material flush with adjacent surface.

3.4 ATTACHING RAILINGS

A. Anchor railing ends at walls with round flanges anchored to wall construction and welded to railing ends.

3.5 ADJUSTING AND CLEANING

A. Touchup Painting: Cleaning and touchup painting of field welds, bolted connections, and abraded areas of shop paint are specified in Section 099600 "High-Performance Coatings."

B. Galvanized Surfaces: Clean field welds, bolted connections, and abraded areas, and repair galvanizing to comply with ASTM A 780/A 780M.

END OF SECTION 055213

1. Provide 12" long sample of framing member, dressed as specified.

B. Material Certificates:

1. For lumber specified to comply with minimum allowable unit stresses. Indicate species and grade selected for each use and design values approved by ALSC's Board of Review.
2. For preservative-treated wood products. Indicate type of preservative used and net amount of preservative retained.

C. Certificates of Inspection: Issued by lumber grading agency for exposed wood products not marked with grade stamp.

1.5 DELIVERY, STORAGE, AND HANDLING

A. Store materials under cover and protected from weather and contact with damp or wet surfaces. Stack lumber flat with spacers between each bundle to provide air circulation. Provide for air circulation around stacks and under coverings.

B. Handle and store plastic lumber to comply with manufacturer's written instructions.

PART 2 - PRODUCTS

2.1 LUMBER, GENERAL

A. Lumber: Comply with DOC PS 20 and with applicable rules of grading agencies indicated. If no grading agency is indicated, provide lumber that complies with the applicable rules of any rules-writing agency certified by ALSC's Board of Review. Provide lumber graded by an agency certified by ALSC's Board of Review to inspect and grade lumber under the rules indicated.

1. Factory mark each item with grade stamp of grading agency.
2. For items that are exposed to view in the completed Work, mark grade stamp on end or back of each piece or omit grade stamp and provide certificates of grade compliance issued by grading agency.
3. Where nominal sizes are indicated, provide actual sizes required by DOC PS 20 for moisture content specified. Where actual sizes are indicated, they are minimum dressed sizes for dry wood products.
4. Provide dressed lumber, S4S, unless otherwise indicated.

B. Maximum Moisture Content: 19 percent.

C. For blocking and nailers used for attachment of other construction, select and cut lumber to eliminate knots and other defects that will interfere with attachment of other work.

D. For furring strips for installing plywood or hardboard paneling, select boards with no knots capable of producing bent-over nails and damage to paneling.

2.2 LUMBER

A. Hand select wood for trailheads, boardwalks and other built features for freedom from characteristics, on exposed surfaces and edges, that would impair finish appearance, including decay, honeycomb, knot holes, shake, splits, torn grain, and wane.

B. GLASS-INFUSED TIMBER FRAMING AND DECKING
1. Basis-of-Design Product: Subject to compliance with requirements, provide products by the following:
a. www.timbersilwood.com; info@timbersilwood.com. TimberSIL® Products; 4 Augusta Arbor Way, Greenville, SC. 29605; v: 864-277-7007; f: 864-277-0455;
b. Species: Manufactured using kiln-dried Southern Yellow Pine, inspected by SPIB or TPI.
c. Grade: #1 Dense; 16 foot maximum lengths standard.
d. Finish: Natural; unfinished. Sealer where required by manufacturer.

C. WOOD PRESERVATIVE TREATED LUMBER
1. Preservative Treatment by pressure process for Site Decks**:** AWPA C2, except that lumber that is not in contact with the ground and is continuously protected from liquid water may be treated according to AWPA C31 with inorganic boron (SBX)
a. Preservative Chemicals: Acceptable to authorities having jurisdiction and containing no arsenic or chromium.
b. Use preservative solution without water repellents or substances that might interfere with application of indicated finishes.
2. Kiln-dry lumber after treatment to a maximum moisture content of 19%.
3. Application: Treat all rough carpentry associated with Site Wood Decks

D. RAFTER AND BENCH FRAMING
1. Provide dimensional lumber framing complying with the following requirements, according to grading rules of grading agency indicated:

2. Species and Grade: Southern pine No. 2; SPIB, or as indicated.

E. PARTITIONS AND MISCELLANEOUS FRAMING
1. Provide miscellaneous framing complying with the following requirements, according to grading rules of grading agency indicated:

2. Species and Grade: Southern pine No. 2; SPIB, or as indicated.

2.3 FASTENERS AND ANCHORS

A. General: Provide fasteners and anchors of size and type indicated that comply with requirements specified in this article for material and manufacture. Provide nails or screws, in sufficient length, to penetrate not less than 1-1/2 inches into wood substrate. Provide products with allowable design loads, as published by manufacturer, that meet or exceed those indicated or required by code.

1. For redwood, use stainless steel or hot-dip galvanized steel fasteners.

THE PARKLANDS OF FLOYDS FORK - PROJECT 3A
SOUTH BECKLEY CREEK PARK & POPE LICK PARK

SECTION 321313 – PORTLAND CEMENT CONCRETE PAVING

PART 1 - GENERAL

1.1 RELATED DOCUMENTS

A. Drawings and general provisions of the Contract, including General and Supplementary Conditions and Division 01 Specification Sections, apply to this Section.

1.2 SUMMARY

A. Section Includes:

1. Curbs and gutters.
2. Sidewalks.
3. Concrete pavement for park roads and trails.
4. Site concrete on grade.
5. Detectable warning mats.

B. Related Sections:

1. Section 033000 "Cast-in-Place Concrete for general building applications of concrete.
2. Section 312000 "Earth Moving" for subgrade preparation, grading and subbase course, and proof rolling.
3. Section 321373 "Concrete Paving Joint Sealants" for joint sealants in expansion and contraction joints within concrete paving and in joints between concrete paving and asphalt paving or adjacent construction.
4. Section 321723 “Pavement Markings” for pavement striping and markings.

1.3 SUBMITTALS

A. Product data for proprietary materials and items, including reinforcement and forming accessories, synthetic fiber reinforcement, admixtures, joint systems, curing compounds, and others if requested by Architect.

B. Design mixes for each class of concrete. Include revised mix proportions when characteristics of materials, project conditions, weather, test results, or other circumstances warrant adjustments.

C. Laboratory test reports for evaluation of concrete materials and mix design tests.

D. Material certificates in lieu of material laboratory test reports when permitted by Architect. Material certificates shall be signed by manufacturer and Contractor certifying that each material item complies with or exceeds requirements. Provide certification from admixture manufacturers that chloride content complies with requirements.

2.9 FIBER REINFORCEMENT

A. Synthetic Fiber: 100 percent virgin monofilament polypropylene fibers engineered and design for use in concrete paving copying with ASTM C 1116/C116M,Type Ill 1/2 to 1 ½ inches long.

1. Provide fibers that have a specific gravity of 0.9, a minimum tensile strength of 70 ksi, graded per manufacturer specifically manufactured to an optimum gradation for use as concrete secondary reinforcement.
2. Uniformly disperse in concrete mixture at manufacturers recommended rate but not less than 1.5 lb/cu.

2.10 DETECTABLE WARNING MATERIAL

A. Surface-applied Detectable Warning Mats:

1. Surface-Applied Detectable Warning Surface: Durable, preformed vitrified polymer composite or thermoplastic mats with integral truncated domes suitable for use on pedestrian access routes.
2. Manufacturers: Subject to compliance with requirements available manufacturers offering products that may be incorporated into the Work include, but are not limited to, the following:
   a. TopMark, by Flint Trading Company, Thomasville, NC 27360; (336)475-6600; www.flinttrading.com.
   b. Ultra ADA Pads- Urethane, by UltraTech International, Inc. Jacksonville, FL 32256, (800) 353-1611, www.ADApads.com.
   c. Armor-Tile, by Engineered Plastics Inc., (800)682-2525; www.armor-tile.com
   d. Or approved equal.
3. Color: Brick Red; integral throughout the thickness of the mat
4. Fasteners: No fasteners to be used for this application.
5. Adhesive: Use manufacturer's recommended 2-part epoxy adhesive.
6. Sealant: Use manufacturer's recommended sealant.
7. Size: 24 inches wide by length shown on the architectural drawings.

PART 3 - EXECUTION

3.1 EXAMINATION

A. Examine exposed subgrades and subbase surfaces for compliance with requirements for dimensional, grading, and elevation tolerances.

B. Proof-roll prepared subbase surface to check for unstable areas or poor soils conditions and verify need for additional compaction or removal and replacement of subbase material. Do

have not been met, as directed by Architect. Testing agency may conduct tests to determine adequacy of concrete by cored cylinders complying with ASTM C42, or by other methods as directed.

3.12 REPAIRS AND PROTECTION

A. Remove and replace concrete paving that is broken, damaged, or defective or that does not comply with requirements in this Section. Remove work in complete sections from joint to joint unless otherwise approved by Architect.

B. Drill test cores, where directed by Architect, when necessary to determine magnitude of cracks or defective areas. Fill drilled core holes in satisfactory paving areas with portland cement concrete bonded to paving with epoxy adhesive.

C. Protect concrete paving from damage. Exclude traffic from paving for at least 14 days after placement. When construction traffic is permitted, maintain paving as clean as possible by removing surface stains and spillage of materials as they occur.

D. Maintain concrete paving free of stains, discoloration, dirt, and other foreign material. Sweep paving not more than two days before date scheduled for Substantial Completion inspections.

3.13 DETECTABLE WARNINGS

A. Install detectable warning mats following manufacturer's recommended instructions, including surface preparation, 2-part epoxy adhesive materials, and sealer protection. The material shall not require the use of mechanical fasteners.

B. The mats must be pliable during installation to allow the mat to be cut to match the access route geometries.

C. Install in temperatures equal or greater than 45 degrees F.

END OF SECTION 321313

2.8 PLANTING SOIL MIX

A. Planting Soil Mix: Mix topsoil with the soil amendments as directed by the Owner's Representative to produce satisfactory planting soil based on tests of imported and existing soils.

~~2.9 BIODEGRADABLE TREE SHELTERS~~

~~A. Tree shelters installed to protect trees and shrubs from herbivory shall be constructed of 100% biodegradable wood or fiber materials such as BioBark™ or approved similar and shall be 36 inches tall.~~

PART 3 - EXECUTION

3.1 EXAMINATION

A. Examine areas to receive exterior plants for compliance with requirements and conditions affecting installation and performance.

B. Proceed with installation only after unsatisfactory conditions have been corrected.

3.2 PREPARATION

A. Protect structures, utilities, sidewalks, pavements, and other facilities, and lawns and existing exterior plants from damage caused by planting operations.

B. Provide erosion-control measures to prevent erosion or displacement of soils and discharge of soil-bearing water runoff or airborne dust to adjacent properties and walkways.

C. For Joint Planting areas (Planting Zone B), install 18-inch diameter builders tubes with soil riprap at all tree and shrub locations in accordance to Section "Buried Soil Riprap" to maintain an 18-inch-deep hole for planting in buried soil riprap.

D. Seed planting area and cover with clean straw mulch and coir fiber matting.

E. Lay out individual tree and shrub locations and areas for multiple plantings. Stake locations, outline areas, adjust locations when requested, and obtain Owner's Representative's acceptance of layout before planting. Make minor adjustments as required.

F. Wrap trees and shrubs with burlap fabric over trunks, branches, stems, twigs, and foliage to protect from wind and other damage during digging, handling, and transportation.